Ellipsoid Model 1

Laurence D. Finston

Created: August 27, 2010

Last updated: November 26, 2010

This document is part of GNU 3DLDF, a package for three-dimensional drawing.

Copyright (C) 2010, 2011 The Free Software Foundation

GNU 3DLDF is free software; you can redistribute it and/or modify it under the terms of the GNU General Public License as published by the Free Software Foundation; either version 3 of the License, or (at your option) any later version.

GNU 3DLDF is distributed in the hope that it will be useful, but WITHOUT ANY WARRANTY; without even the implied warranty of MERCHANTABILITY or FITNESS FOR A PARTICULAR PURPOSE. See the GNU General Public License for more details.

You should have received a copy of the GNU General Public License along with GNU 3DLDF; if not, write to the Free Software Foundation, Inc., 51 Franklin St, Fifth Floor, Boston, MA 02110-1301 USA

See the GNU Free Documentation License for the copying conditions that apply to this document.

You should have received a copy of the GNU Free Documentation License along with GNU 3DLDF; if not, write to the Free Software Foundation, Inc., 51 Franklin St, Fifth Floor, Boston, MA 02110-1301 USA

The mailing list `info-3dldf@gnu.org` is for sending announcements to users. To subscribe to this mailing list, send an email with "subscribe ⟨email-address⟩" as the subject.

The webpages for GNU 3DLDF are here: `http://www.gnu.org/software/3dldf/LDF.html`

The author can be contacted at:

Laurence D. Finston
c/o Free Software Foundation, Inc.
51 Franklin St, Fifth Floor
Boston, MA 02110-1301
USA

`Laurence.Finston@gmx.de`

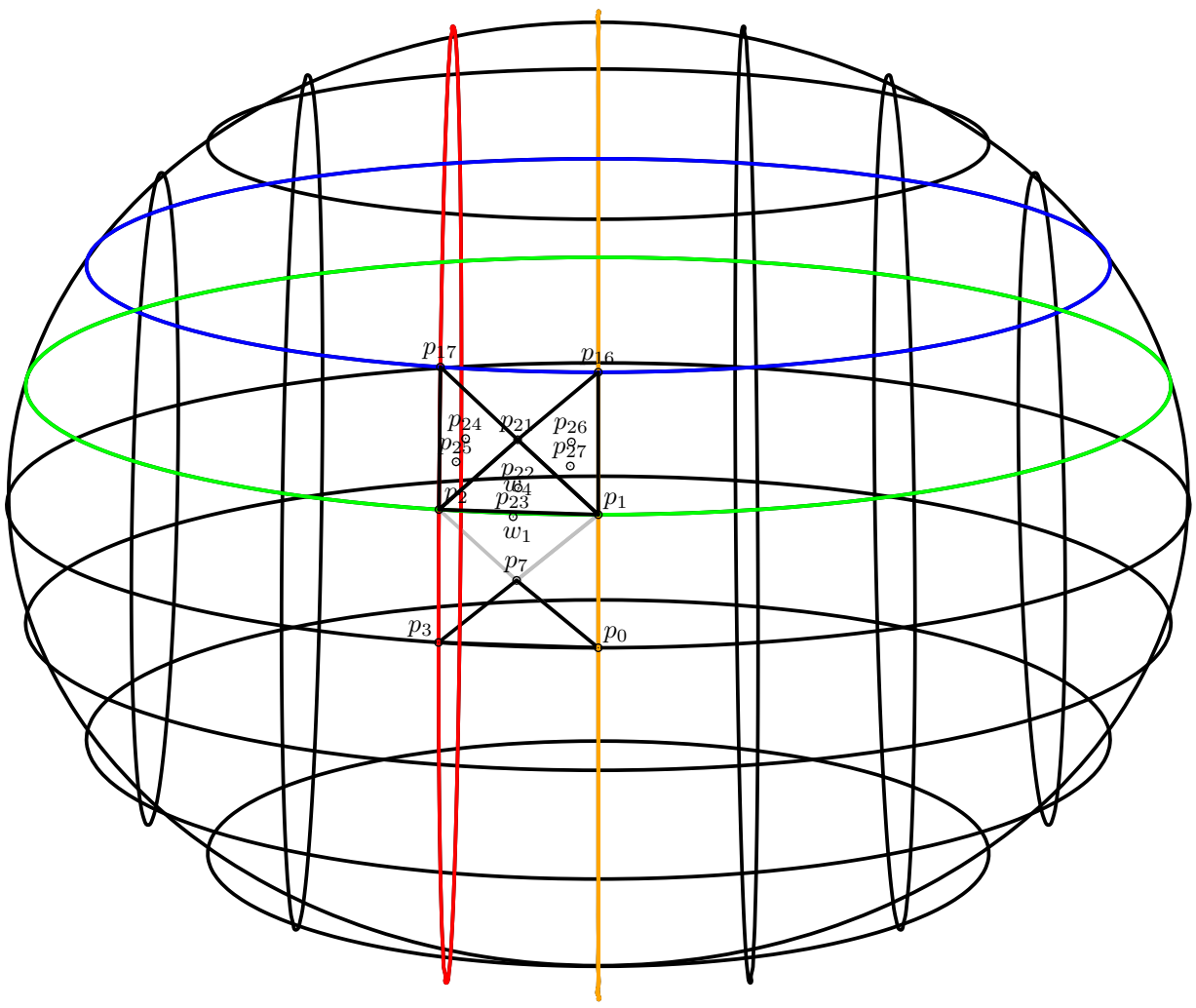

Instructions

PLEASE NOTE! These plans are a work-in-progress and cannot yet be used for making a model! August 27, 2010.

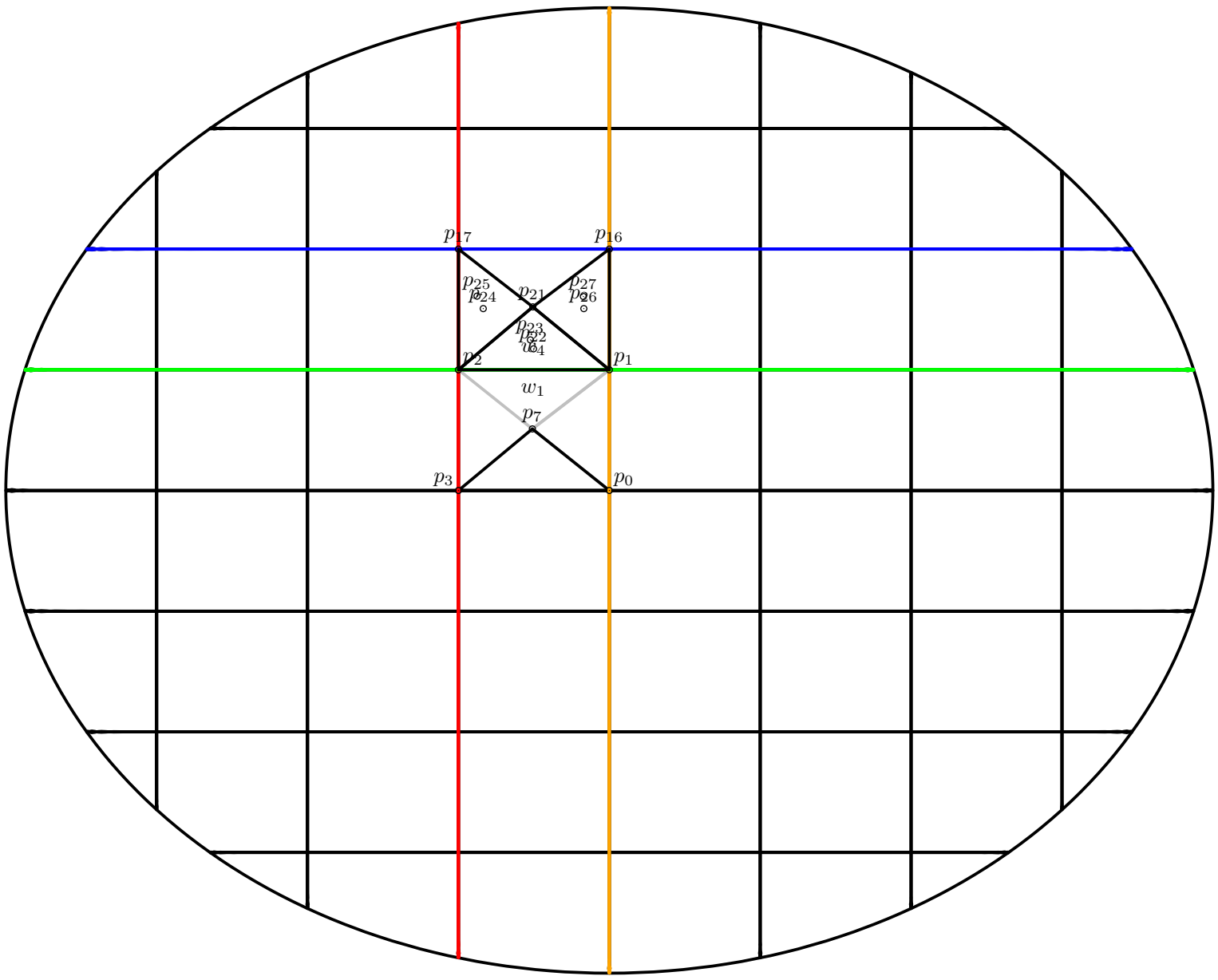

Parallel x-y

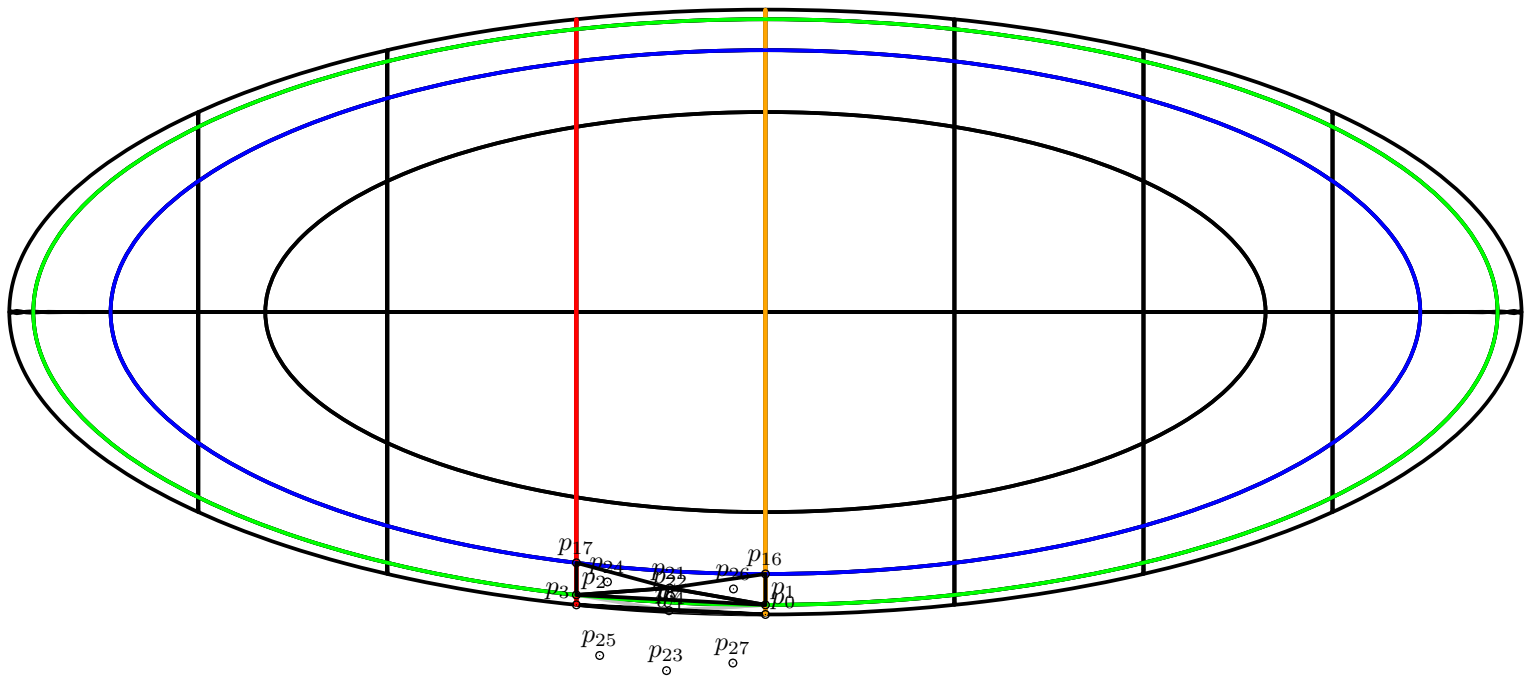

Parallel x-z

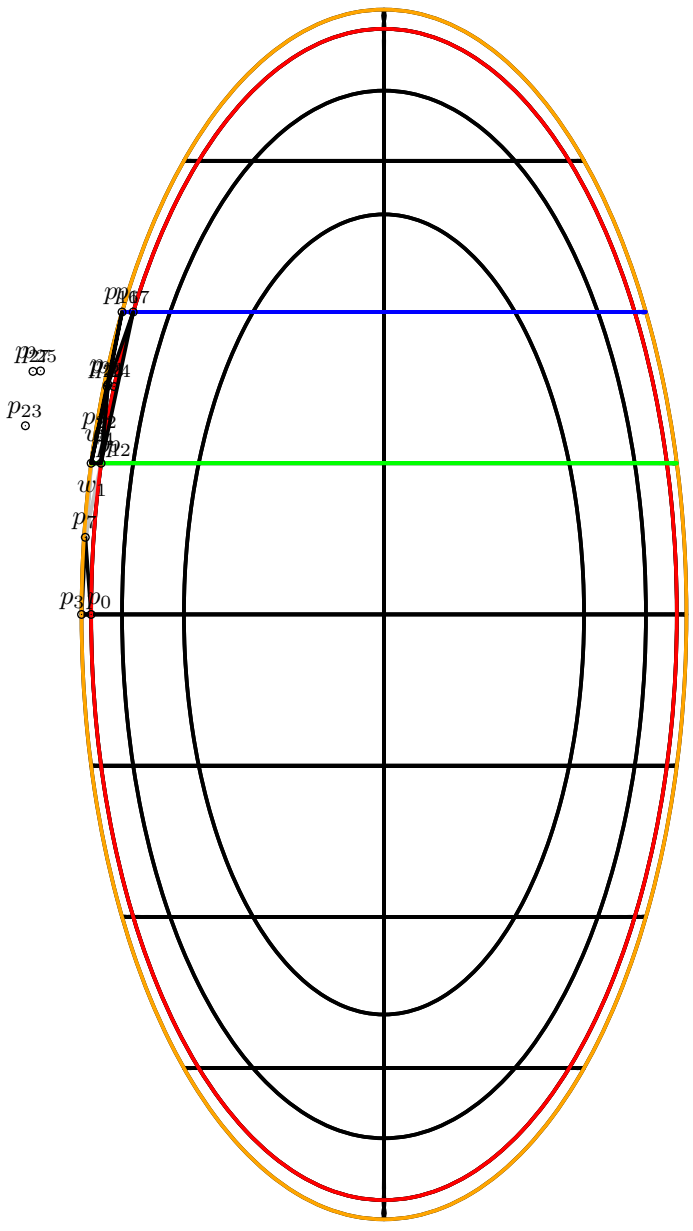

Parallel z-y

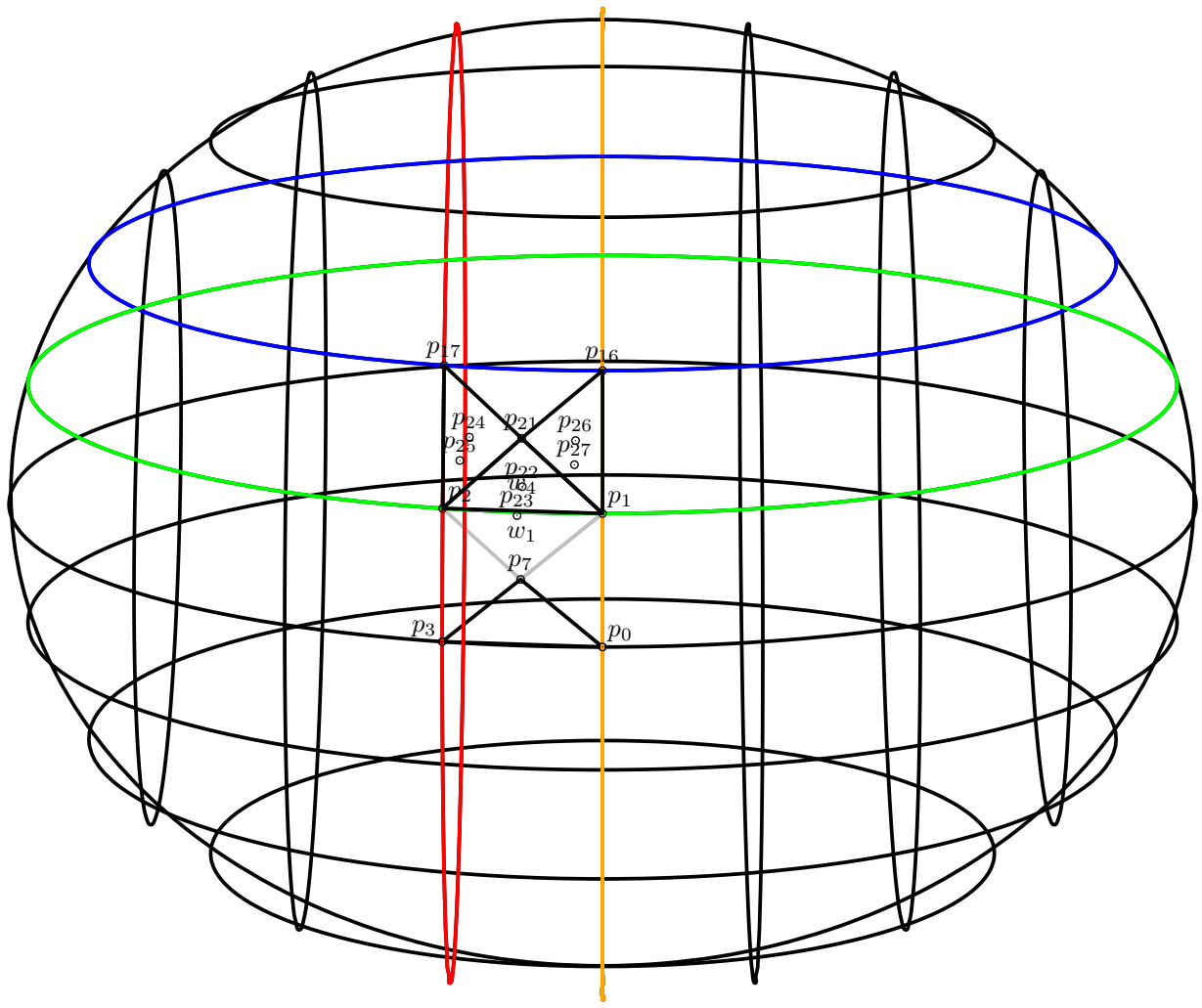

Perspective

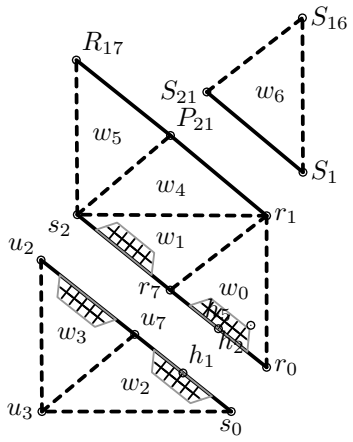

Plans

$w_0 - w_2$

$w_1 - w_3$

Tabs
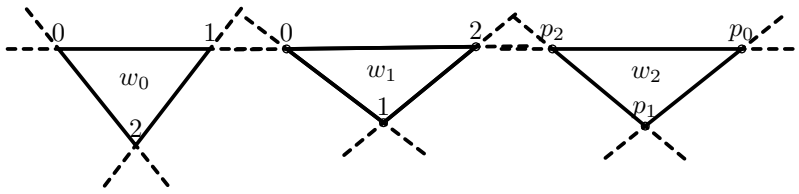
Triangles for Cutting-Out