Papercut Patterns

Laurence D. Finston

Created: January 1, 2011

Last updated: January 5, 2011

This document is part of GNU 3DLDF, a package for three-dimensional drawing.

Copyright (C) 2011 The Free Software Foundation

GNU 3DLDF is free software; you can redistribute it and/or modify it under the terms of the GNU General Public License as published by the Free Software Foundation; either version 3 of the License, or (at your option) any later version.

GNU 3DLDF is distributed in the hope that it will be useful, but WITHOUT ANY WARRANTY; without even the implied warranty of MERCHANTABILITY or FITNESS FOR A PARTICULAR PURPOSE. See the GNU General Public License for more details.

You should have received a copy of the GNU General Public License along with GNU 3DLDF; if not, write to the Free Software Foundation, Inc.,
51 Franklin St, Fifth Floor, Boston, MA 02110-1301 USA

See the GNU Free Documentation License for the copying conditions that apply to this document.

You should have received a copy of the GNU Free Documentation License along with GNU 3DLDF; if not, write to the Free Software Foundation, Inc., 51 Franklin St, Fifth Floor, Boston, MA 02110-1301 USA

The mailing list `info-3dldf@gnu.org` is for sending announcements to users. To subscribe to this mailing list, send an email with "subscribe ⟨email-address⟩" as the subject.

The webpages for GNU 3DLDF are here: `http://www.gnu.org/software/3dldf/LDF.html`

The author can be contacted at:

Laurence D. Finston
c/o Free Software Foundation, Inc.
51 Franklin St, Fifth Floor
Boston, MA 02110-1301
USA

Email: `Laurence.Finston@gmx.de`
GNU 3DLDF website: `http://www.gnu.org/software/3dldf/LDF.html`

Papercut Patterns

The technical drawings in this document can be used for creating papercut or works of art of a similar nature. They are meant for patterns with multiple lines of symmetry, such as papercuts made by folding and cutting patterns into two or more layers of the paper.

Half of the drawings contain a circle divided into sections by two polygons, p_1 and p_2, where p_2 has twice as many sides as p_1. Put another way, the lines of p_2 divide each triangular section of p_1 into halves.

The other half of the drawings contains one or more separate sections from the "polygon-circle" on the previous page. These sections can be used for creating patterns, which can then be transferred to the drawing with the entire "polygon-circle". The dashed grey lines can be used for aligning them with the corresponding lines on the drawing of the polygon-circle.

More than one section can fit on a single page, but it requires some fiddling to get this right. As of this date (January 5, 2011), the author has only done this for the 5-gon/10-gon, 7-gon/14-gon and 9-gon/18-gon sections.

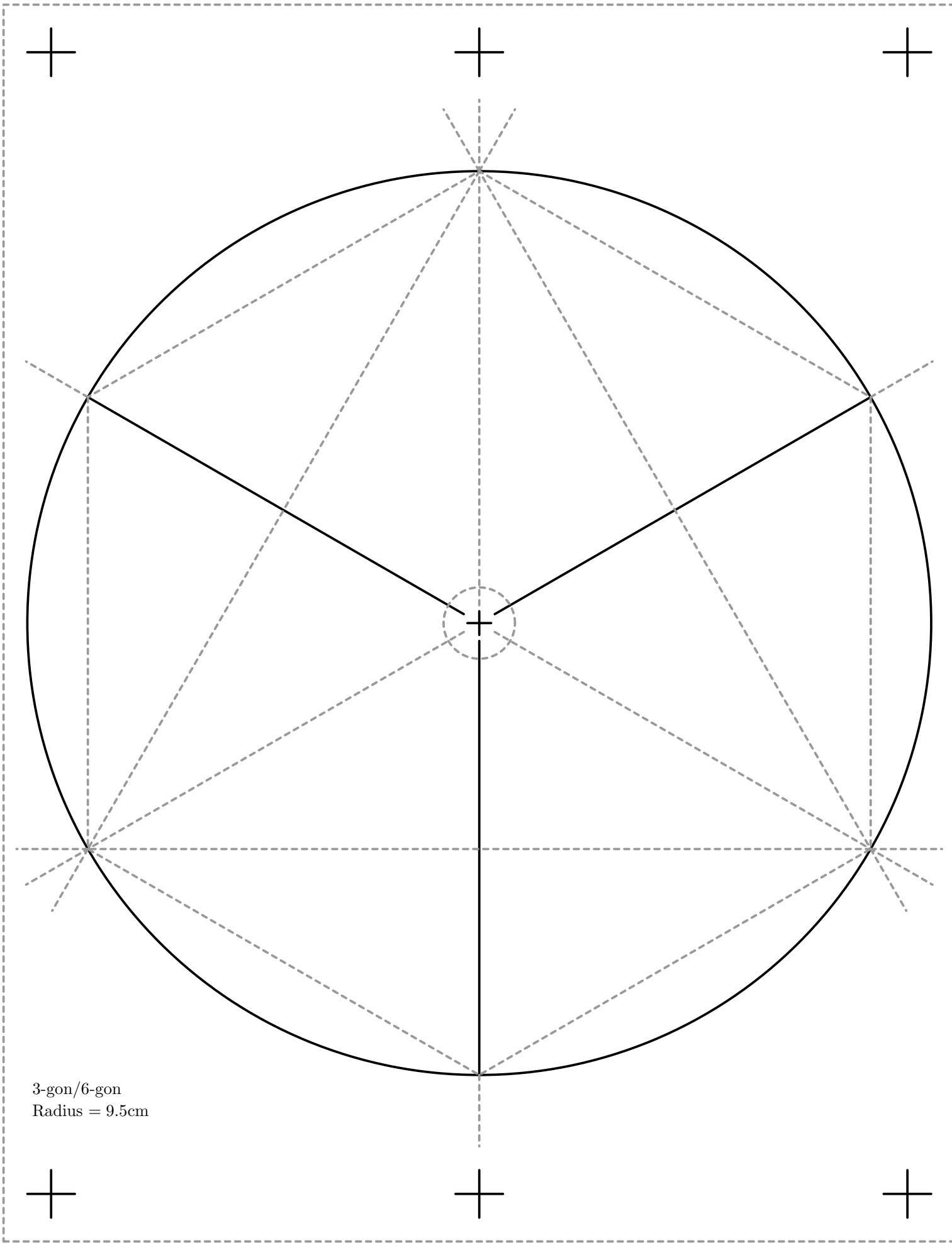
3-gon/6-gon
Radius = 9.5cm

Section 3-gon/6-gon

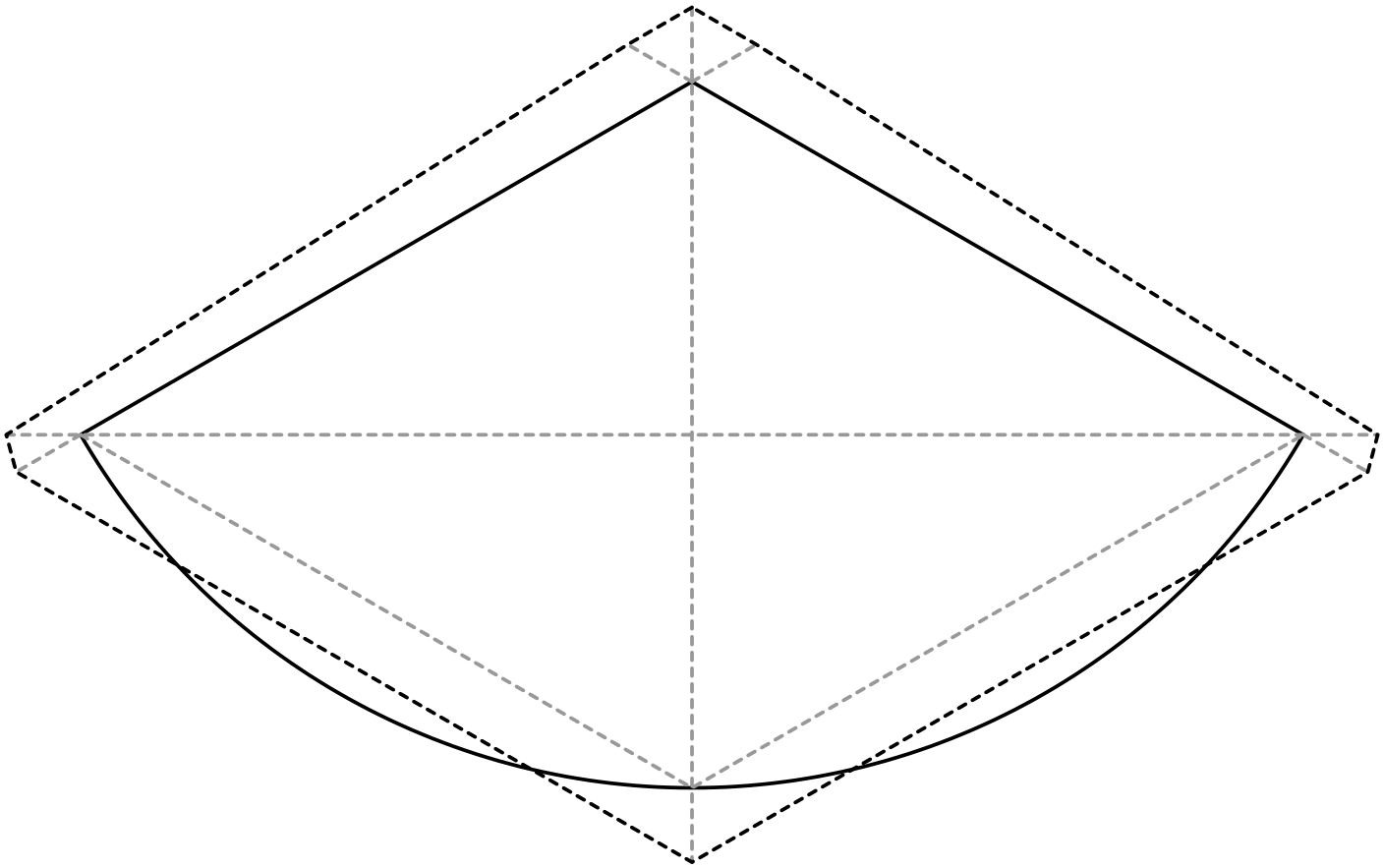

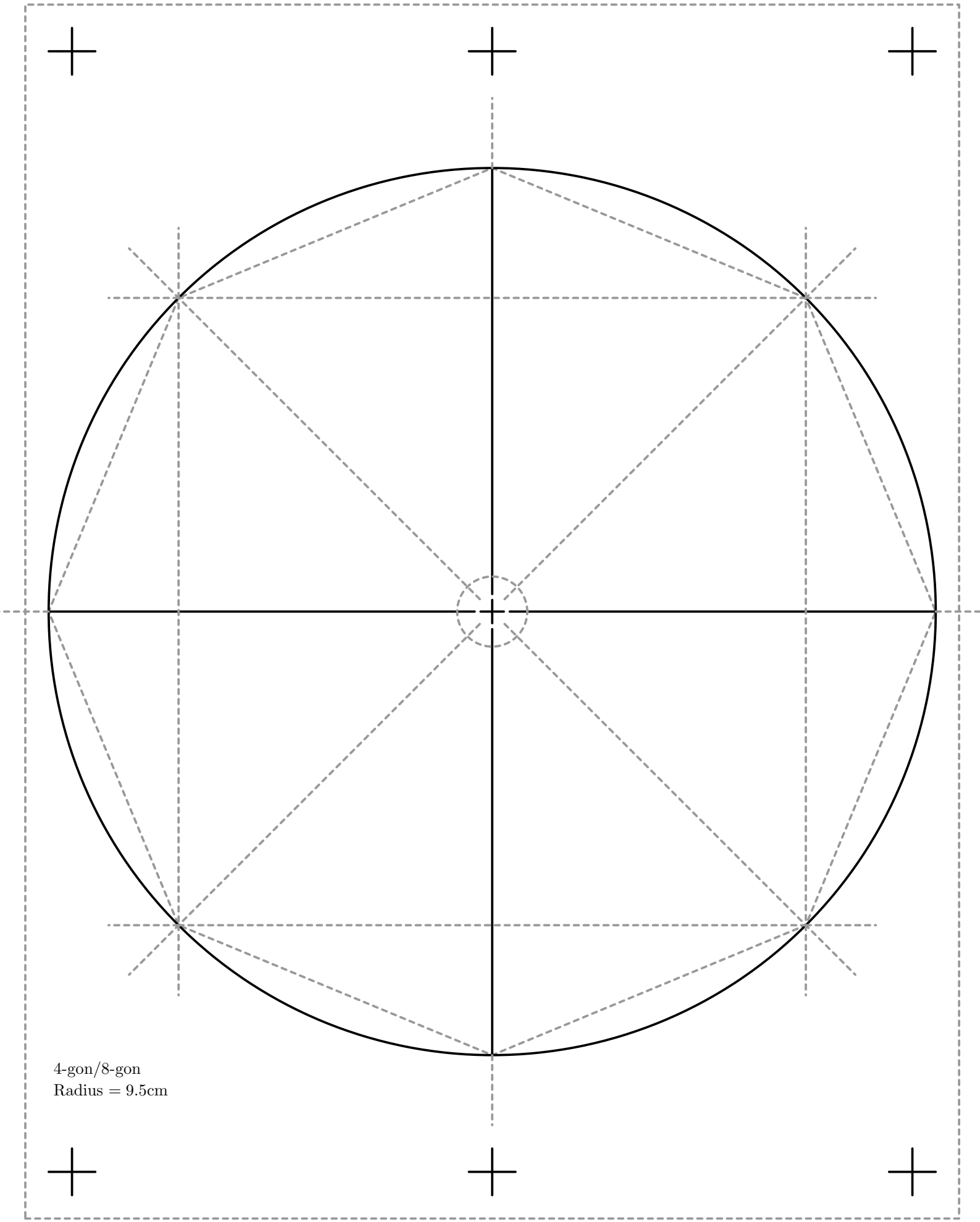
4-gon/8-gon
Radius = 9.5cm

Section 4-gon/8-gon

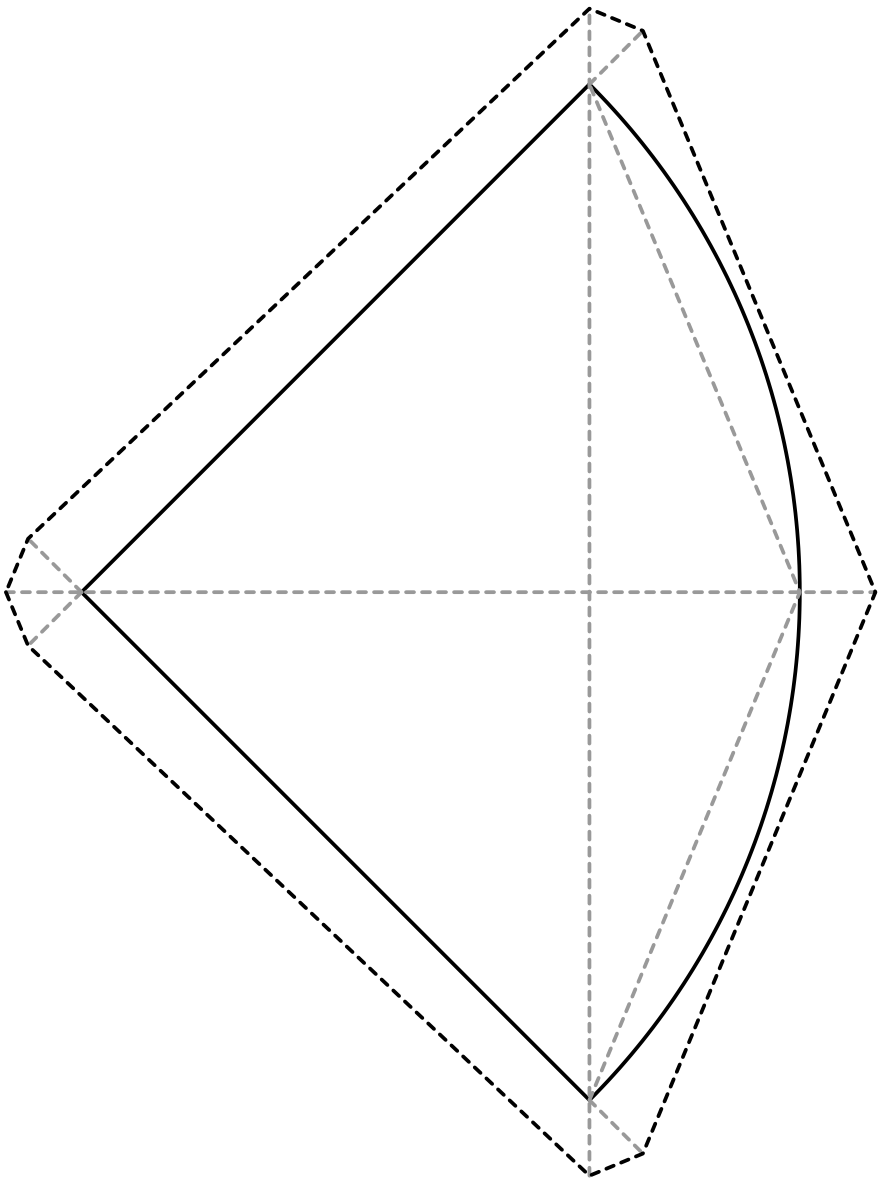

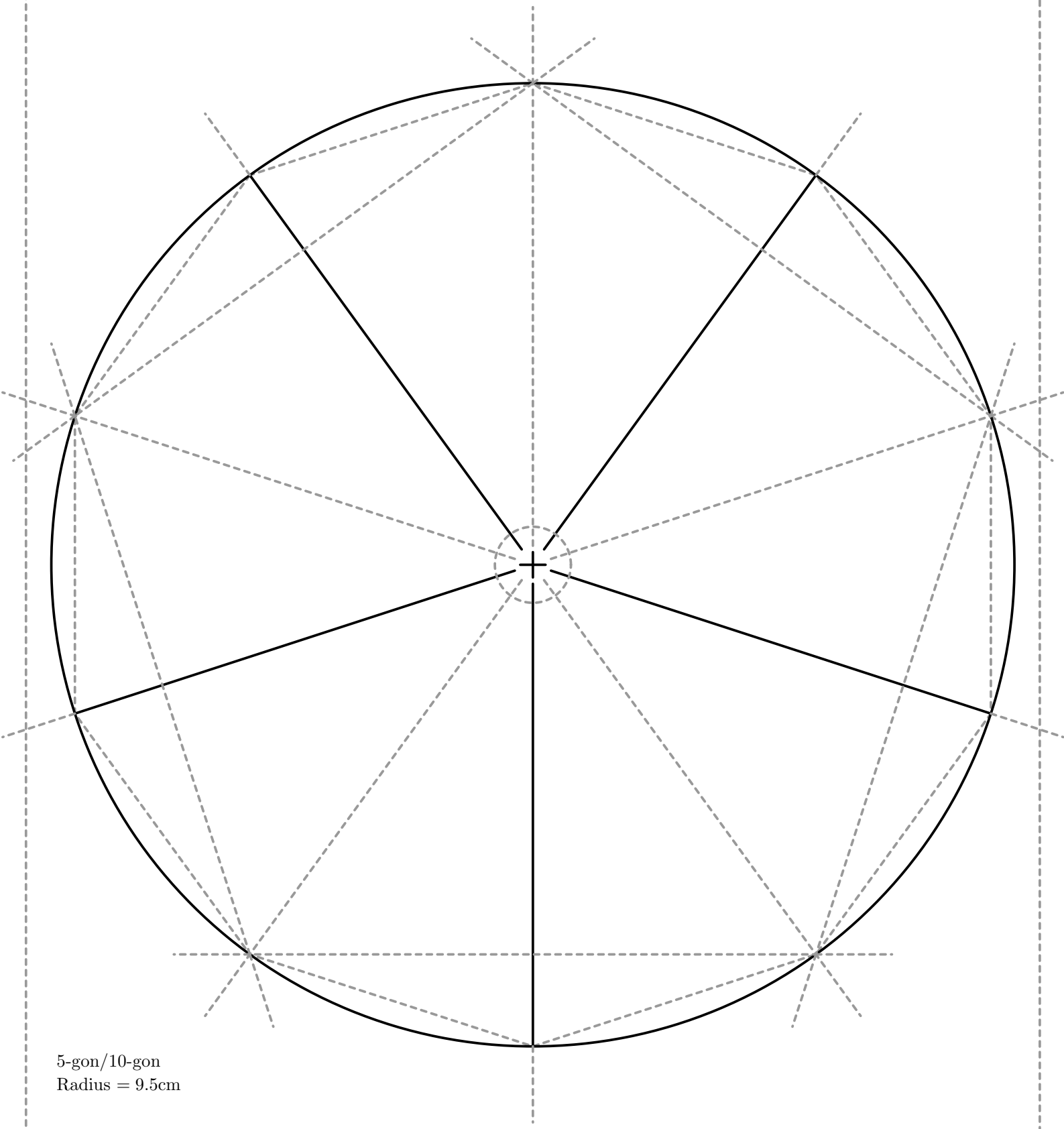

5-gon/10-gon
Radius = 9.5cm

Section 5-gon/10-gon

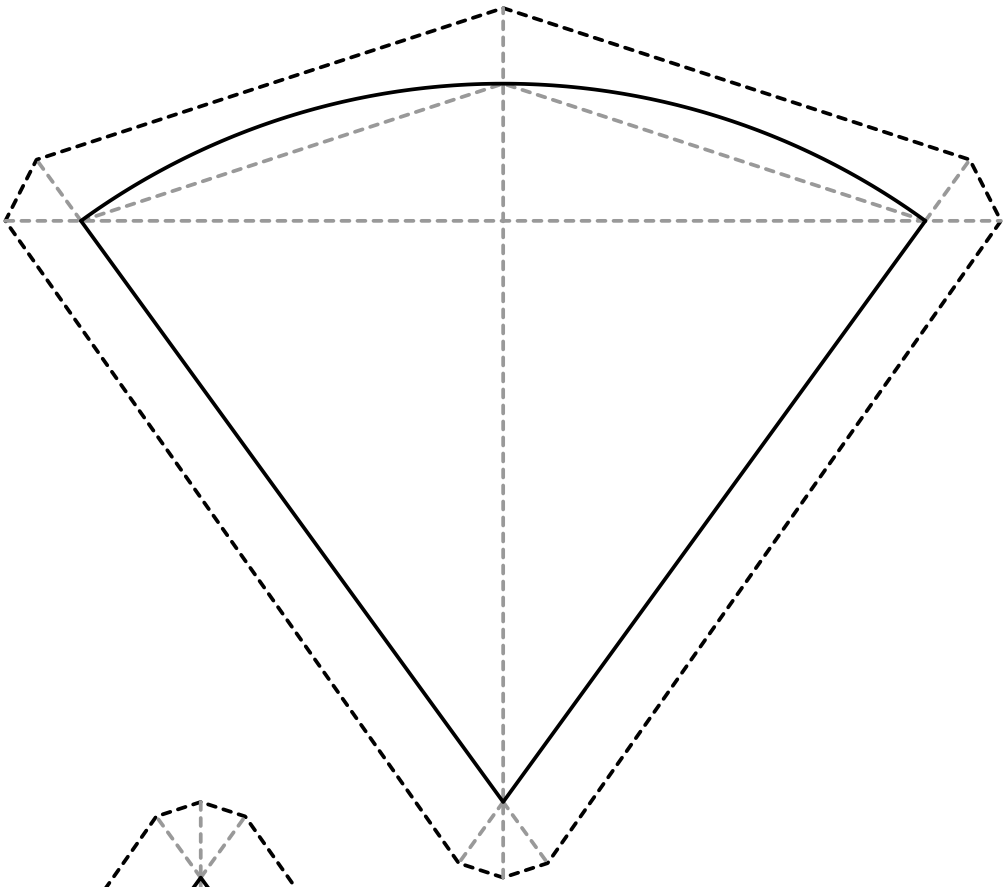

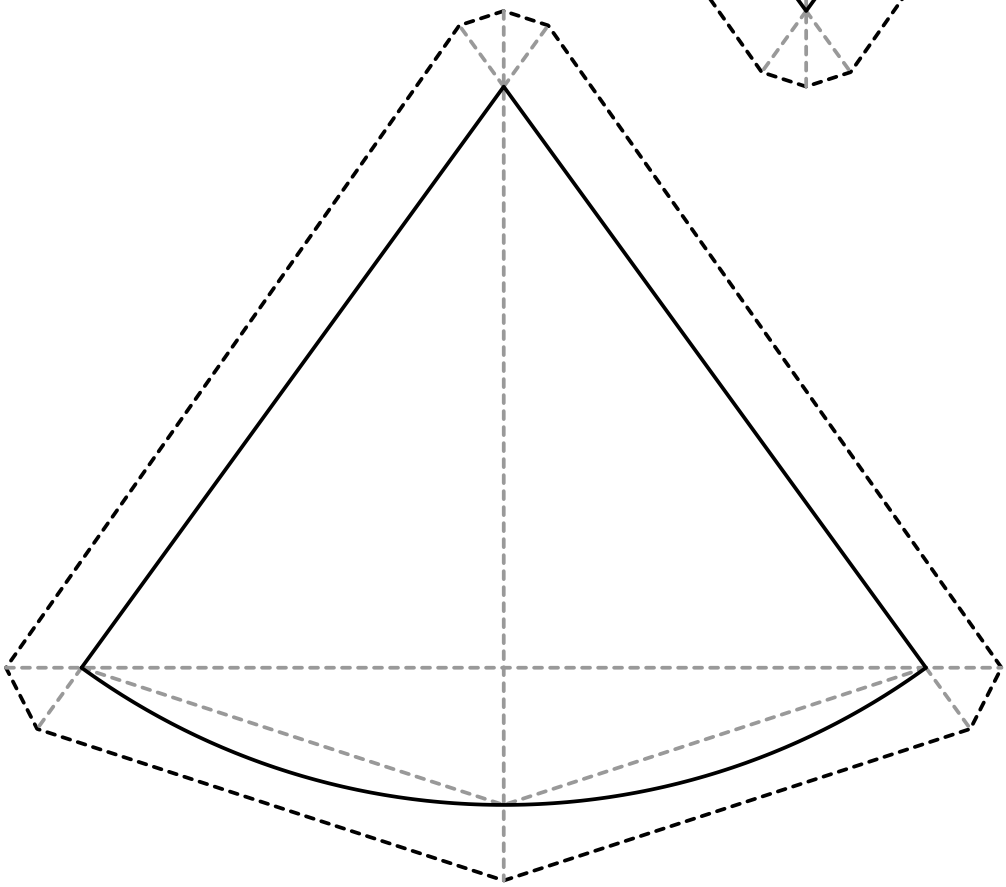

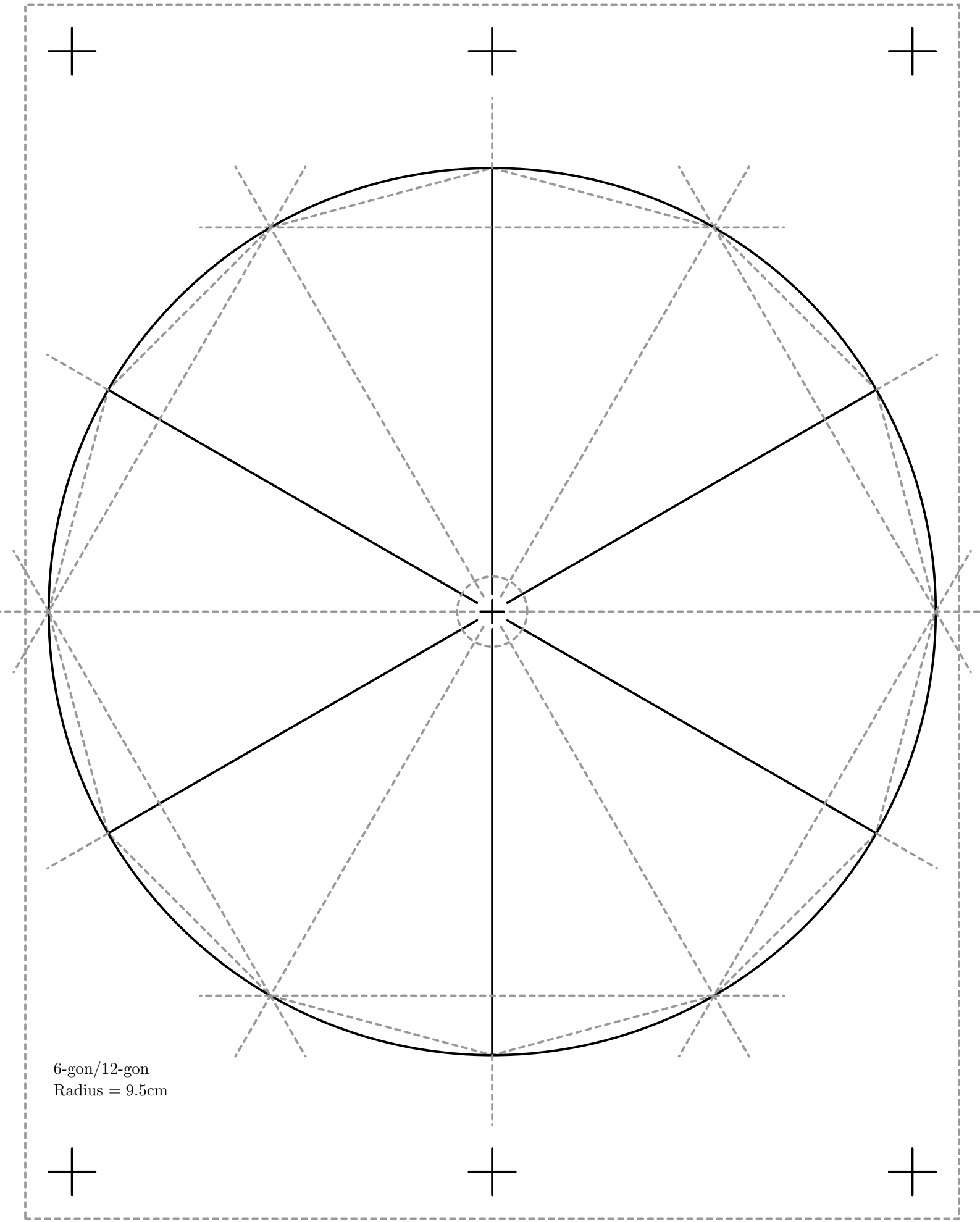
6-gon/12-gon
Radius = 9.5cm

Section 6-gon/12-gon

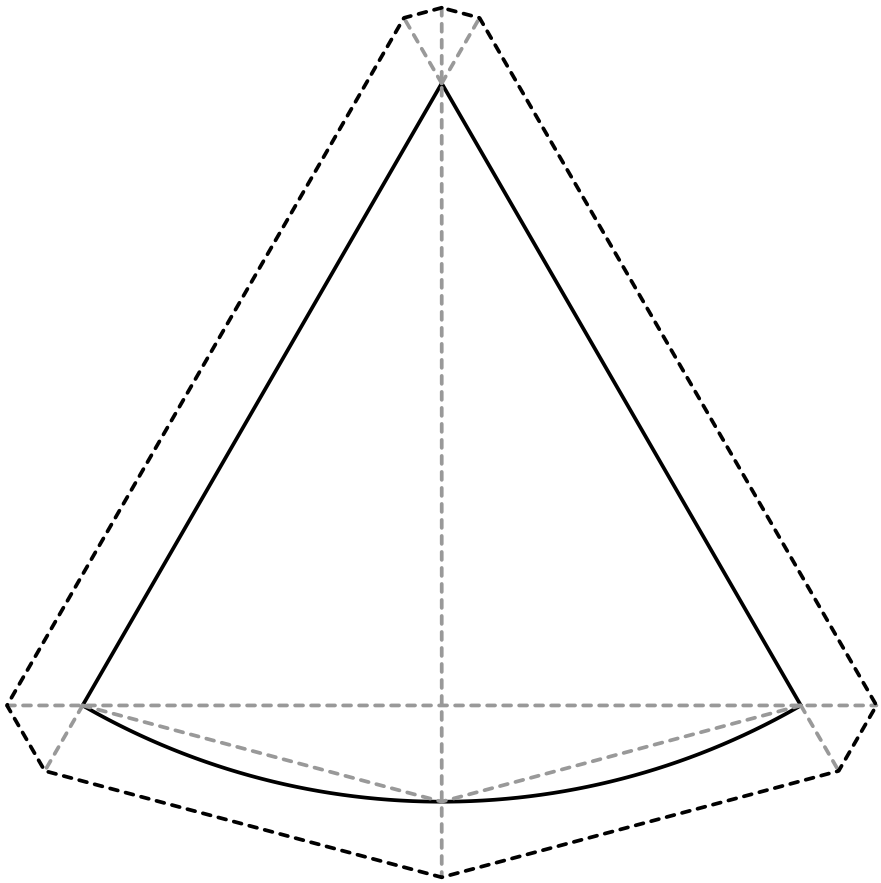

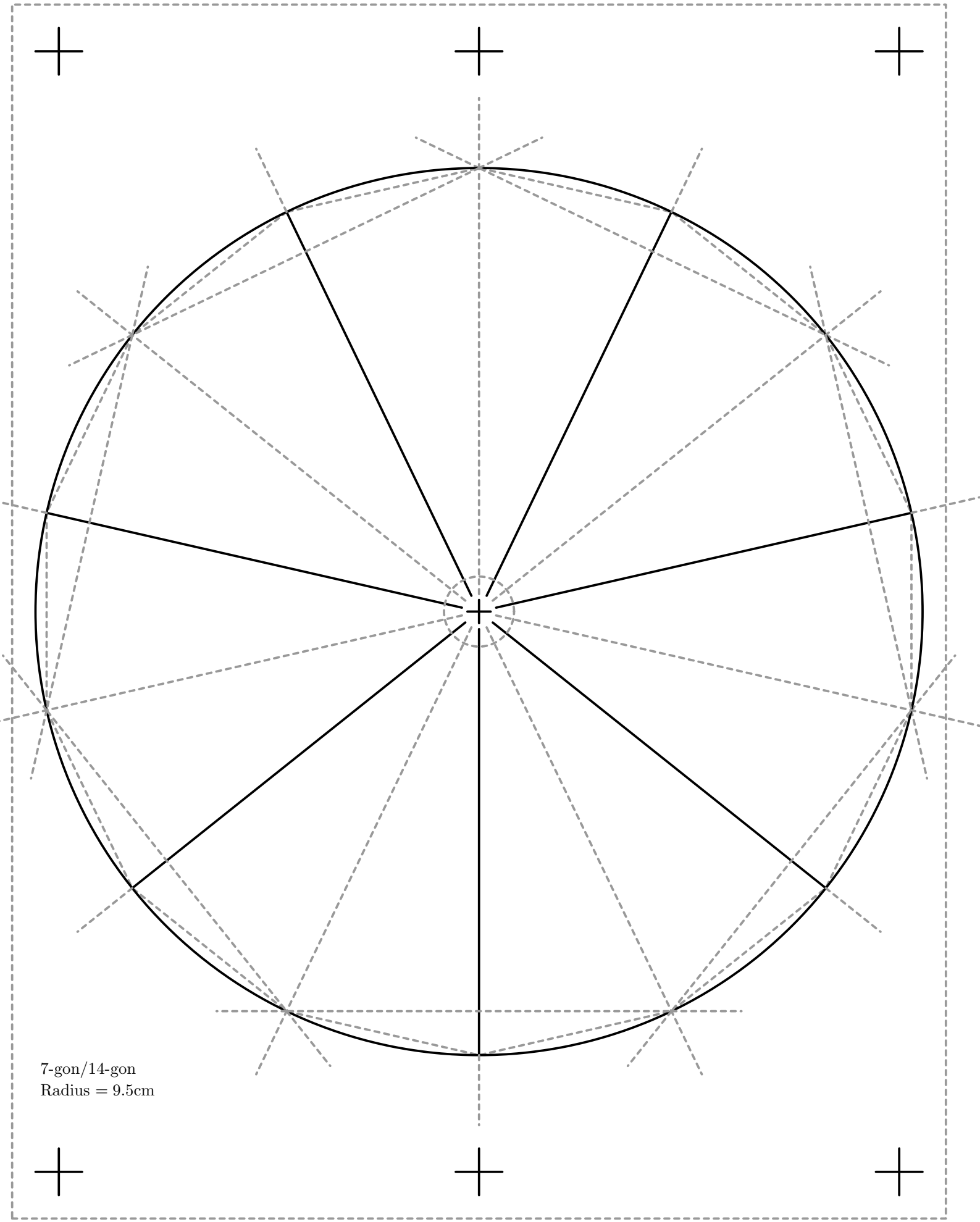
7-gon/14-gon
Radius = 9.5cm

Section 7-gon/14-gon

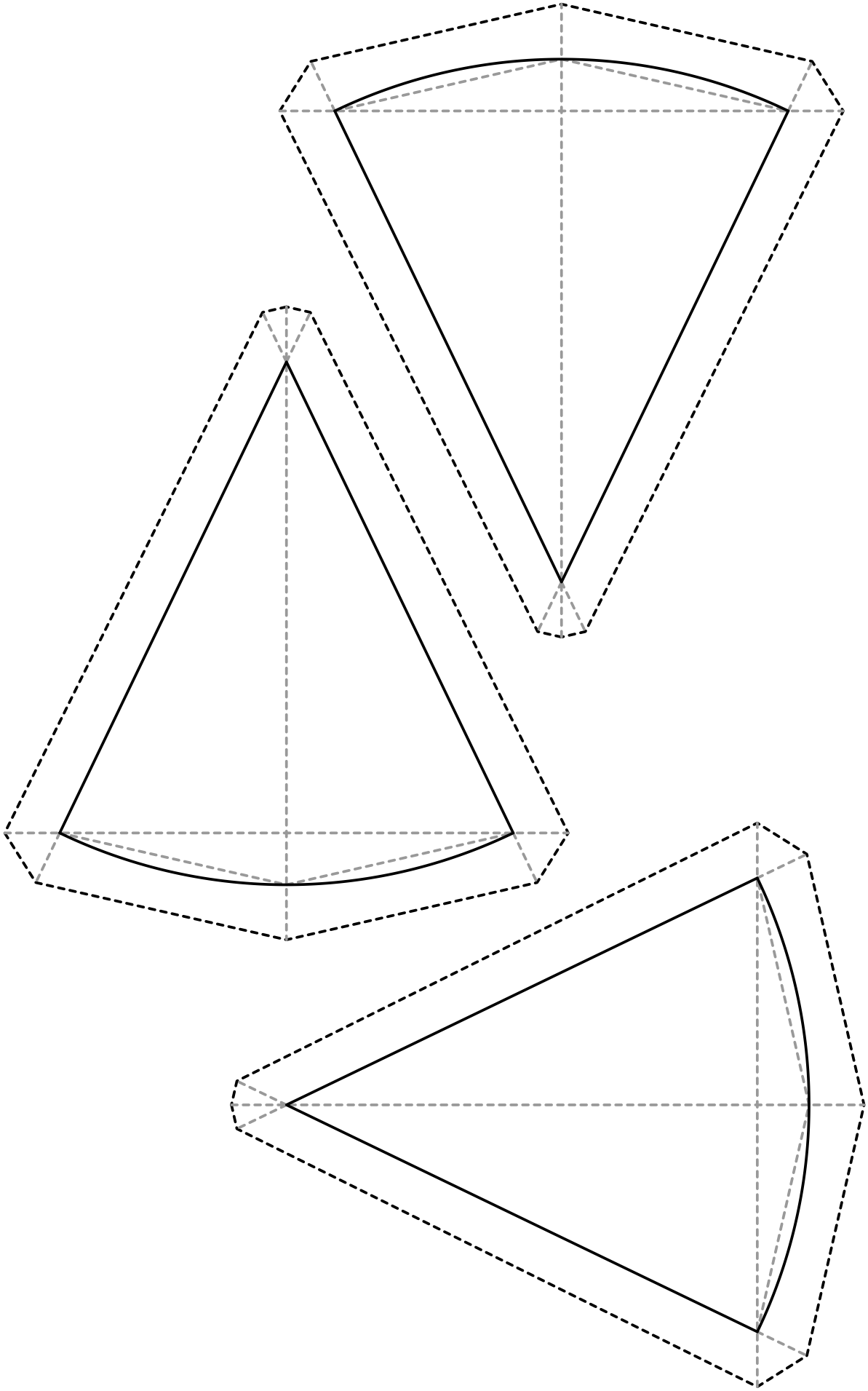

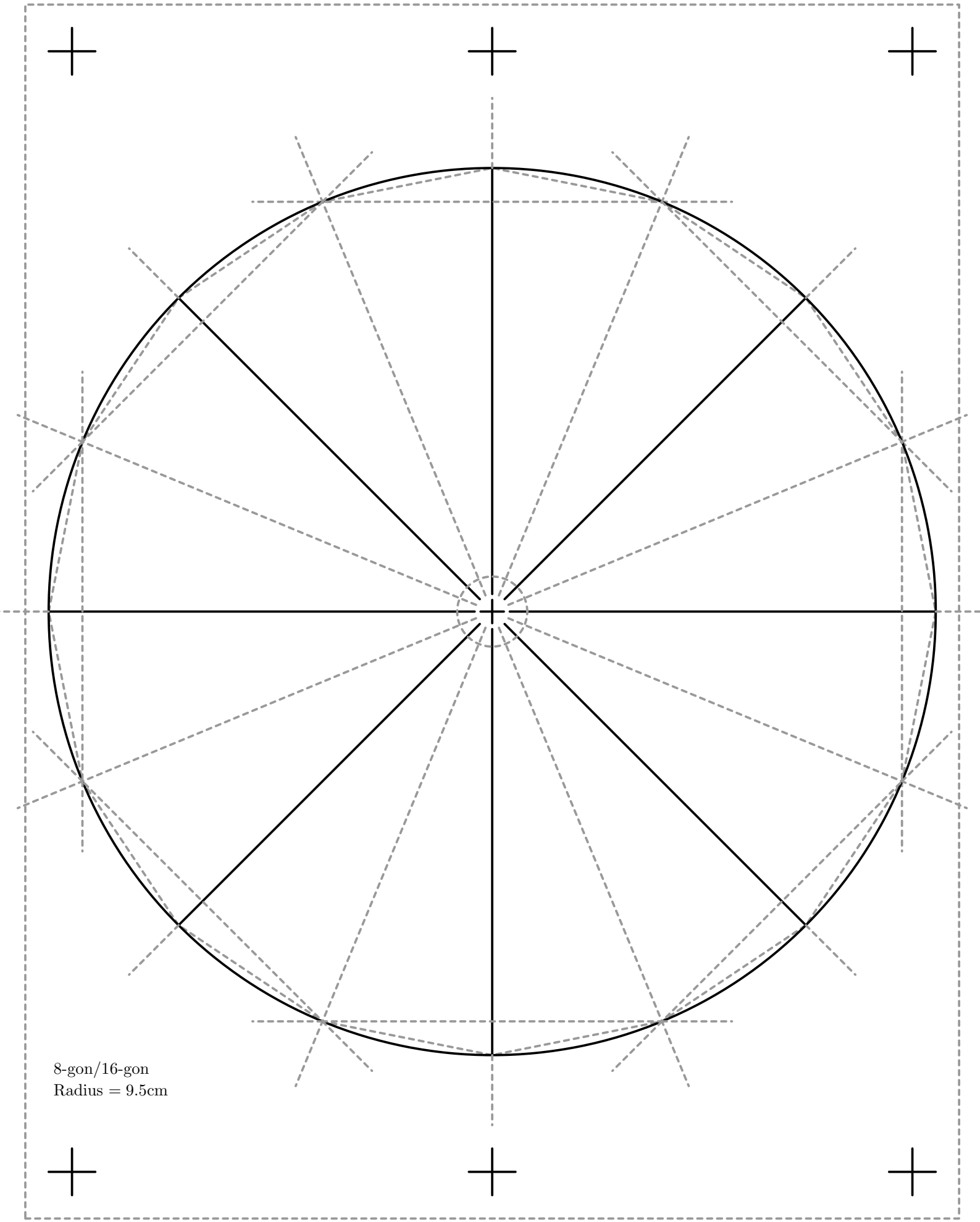
8-gon/16-gon
Radius = 9.5cm

Section 8-gon/16-gon

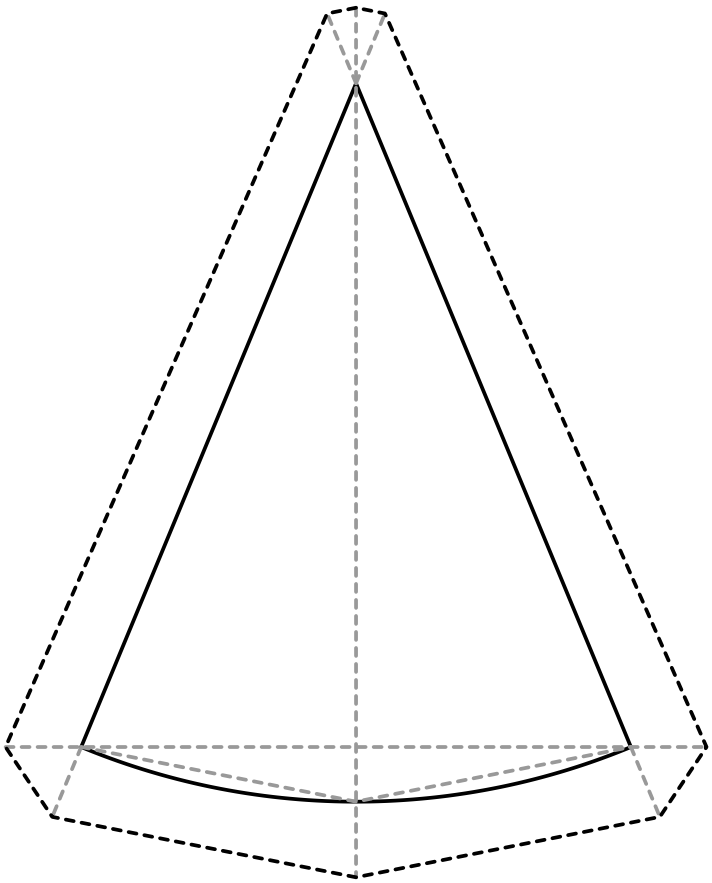

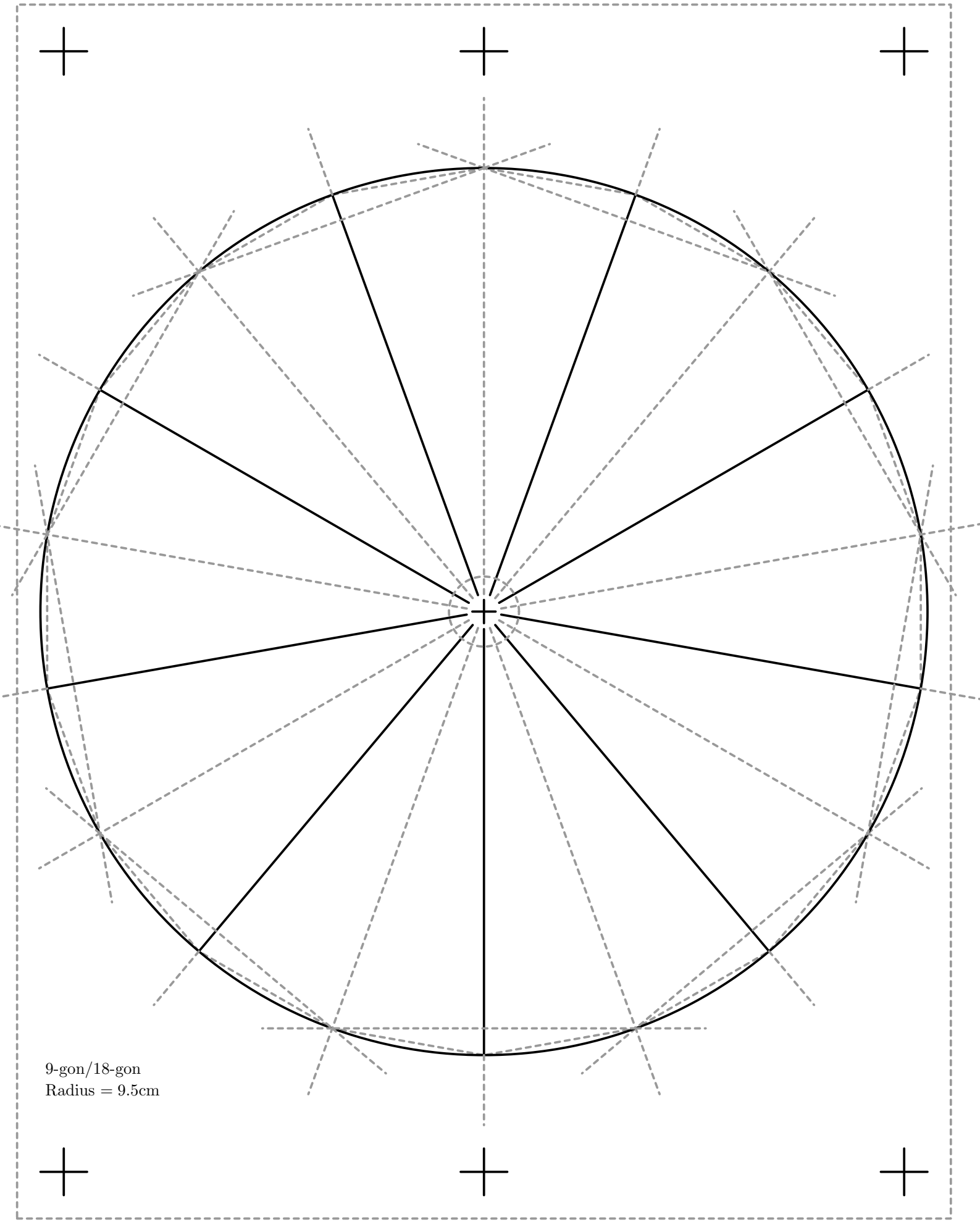
9-gon/18-gon
Radius = 9.5cm

Section 9-gon/18-gon

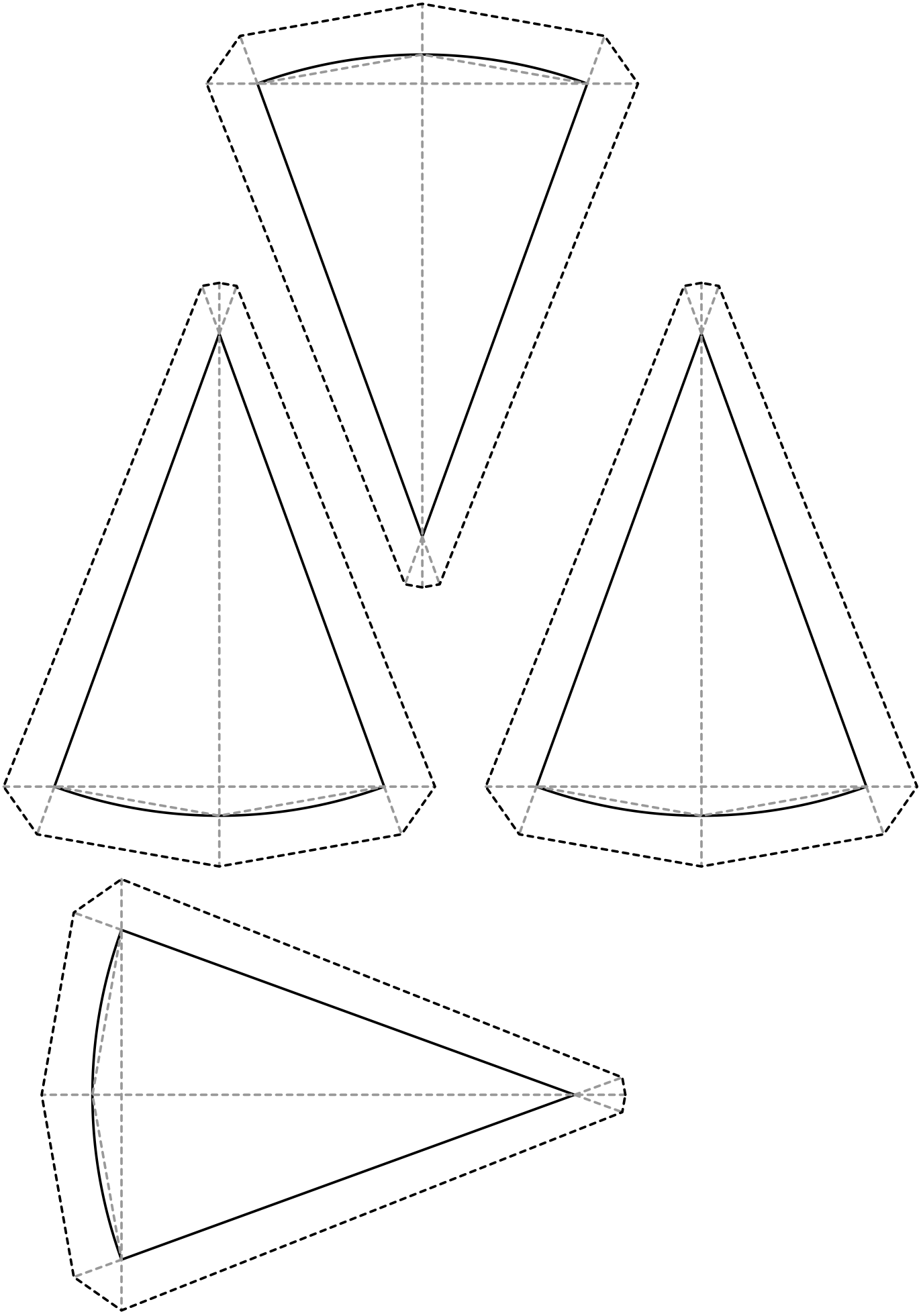

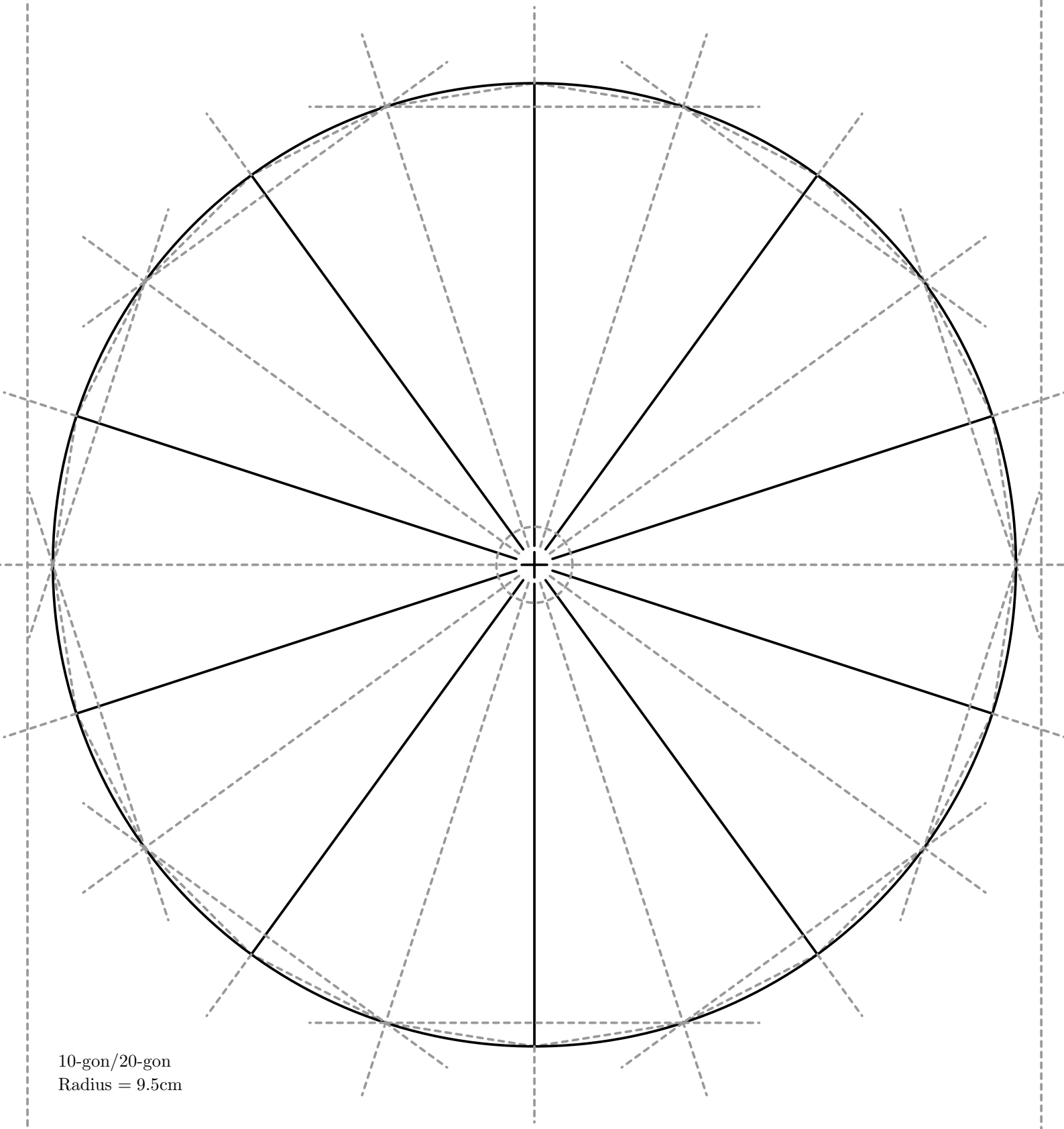

10-gon/20-gon
Radius = 9.5cm

Section 10-gon/20-gon

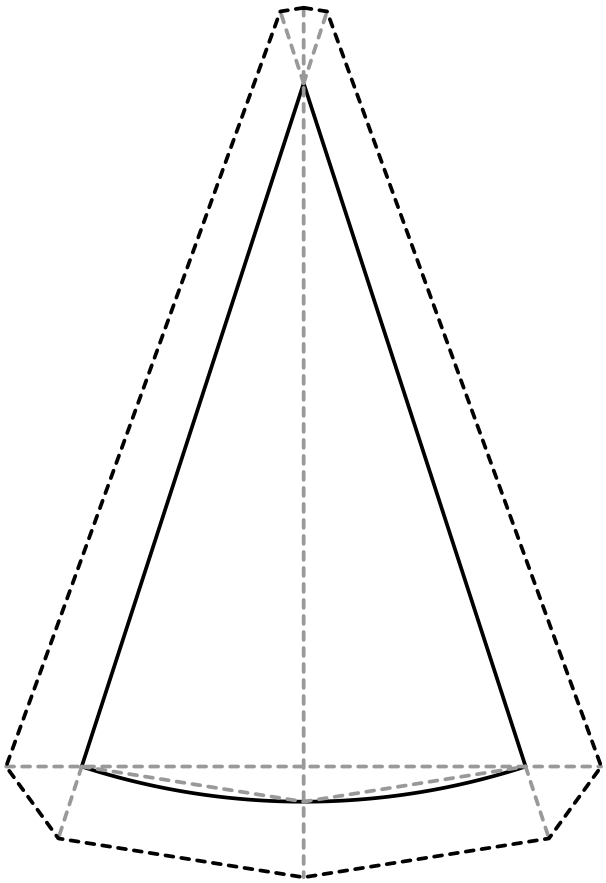

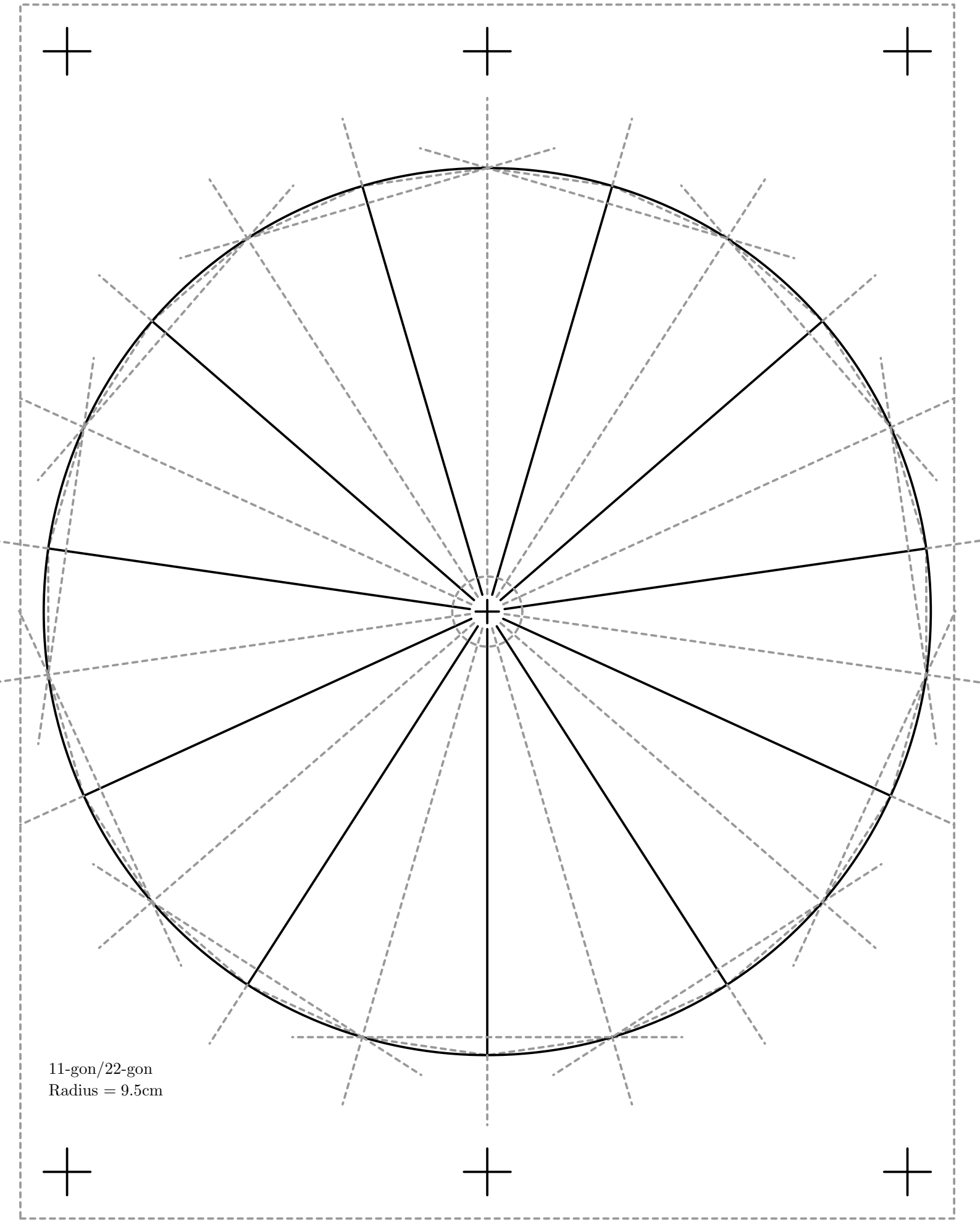
11-gon/22-gon
Radius = 9.5cm

Section 11-gon/22-gon

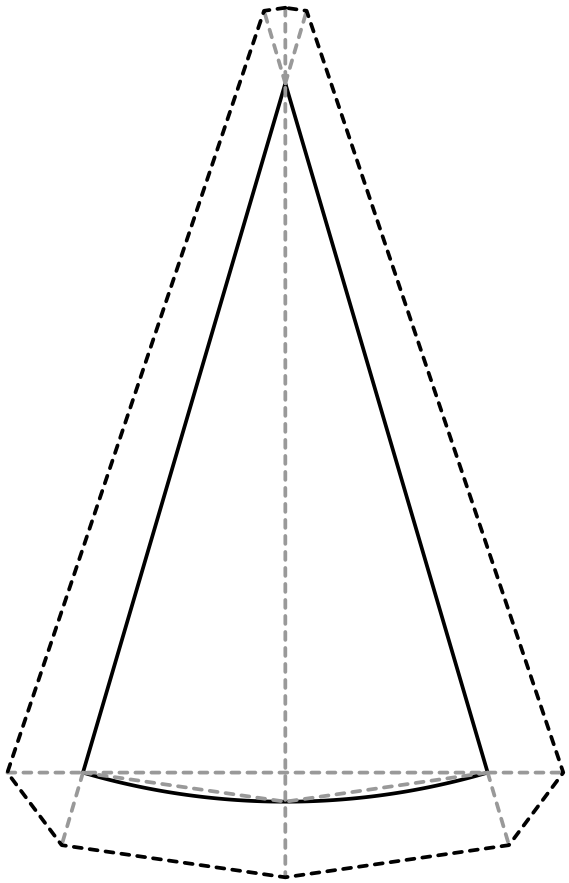

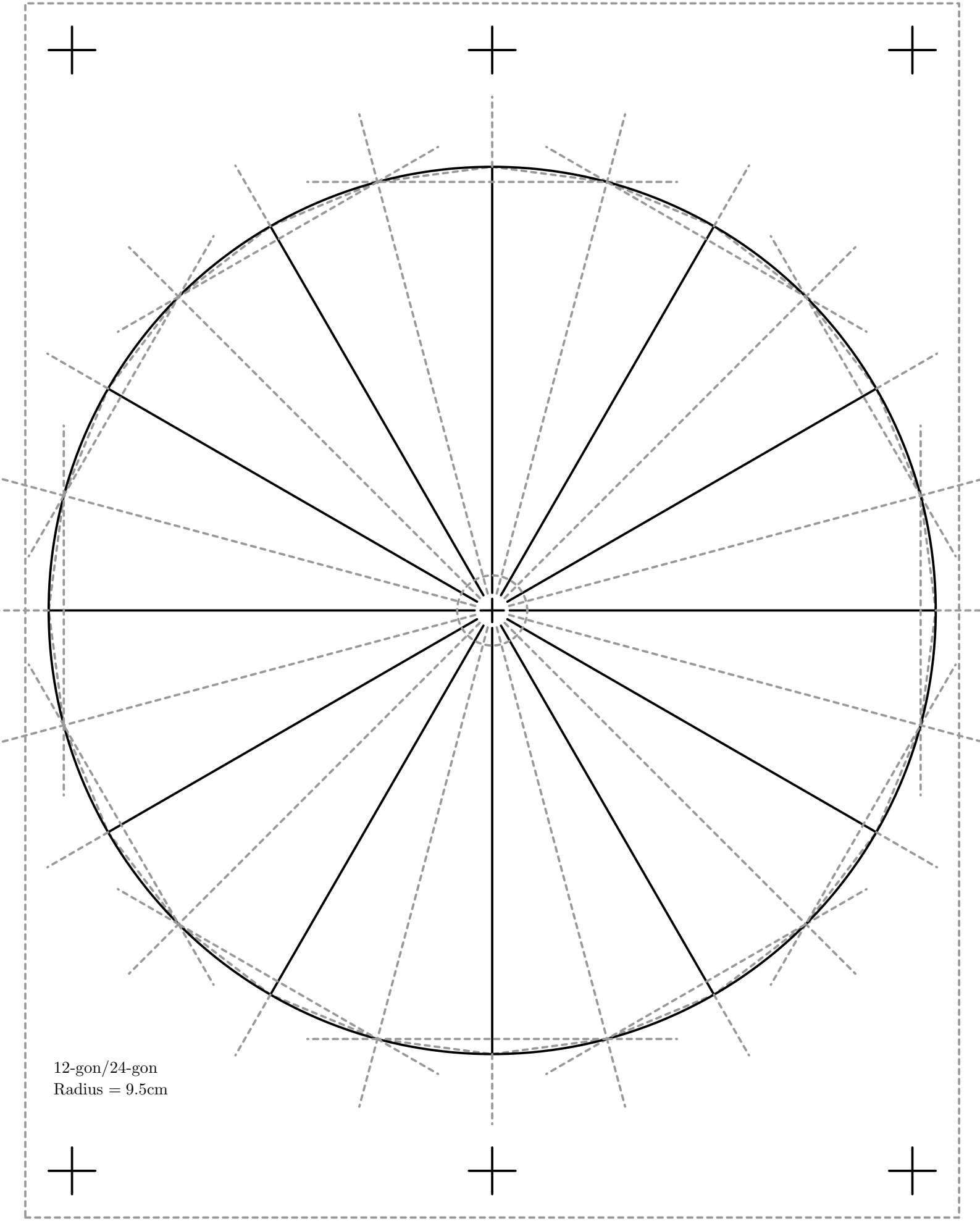
12-gon/24-gon
Radius = 9.5cm

Section 12-gon/24-gon

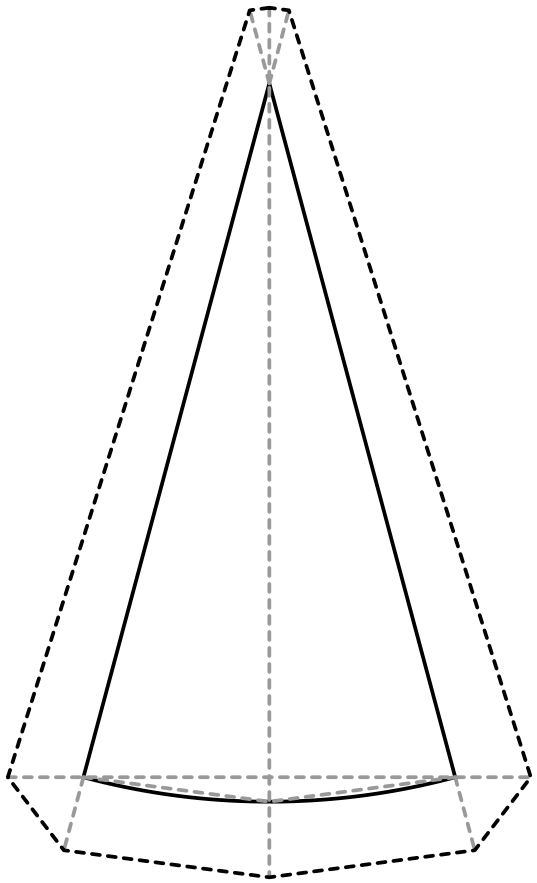

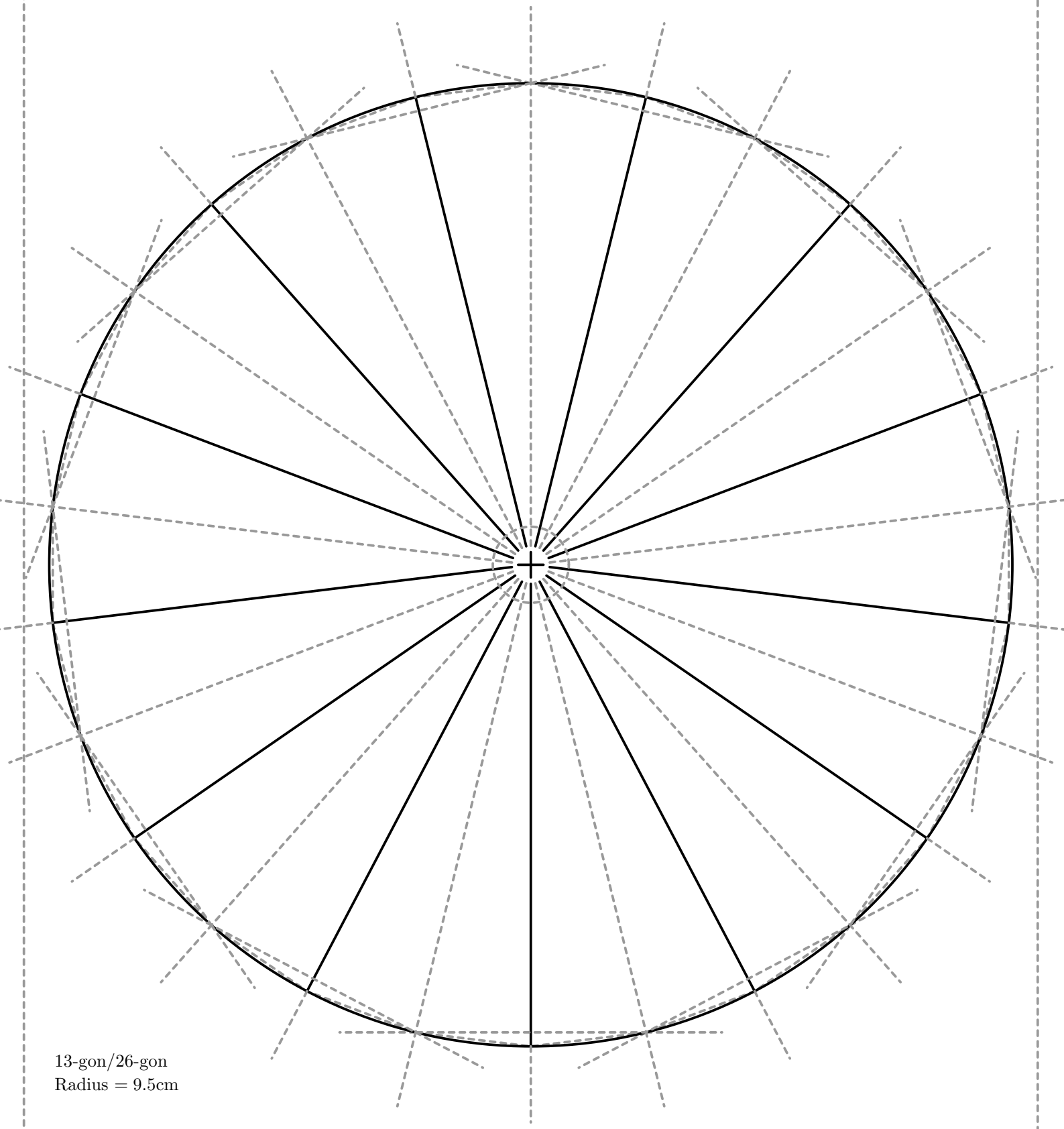

13-gon/26-gon
Radius = 9.5cm

Section 13-gon/26-gon

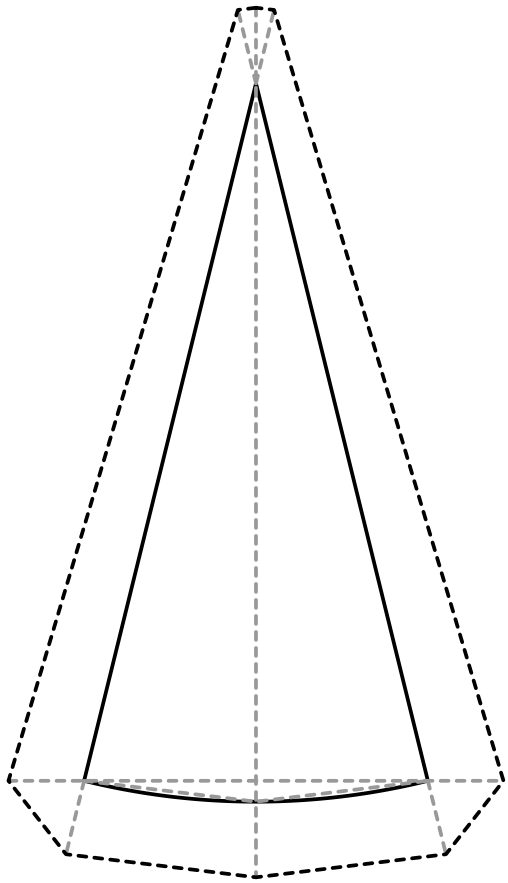

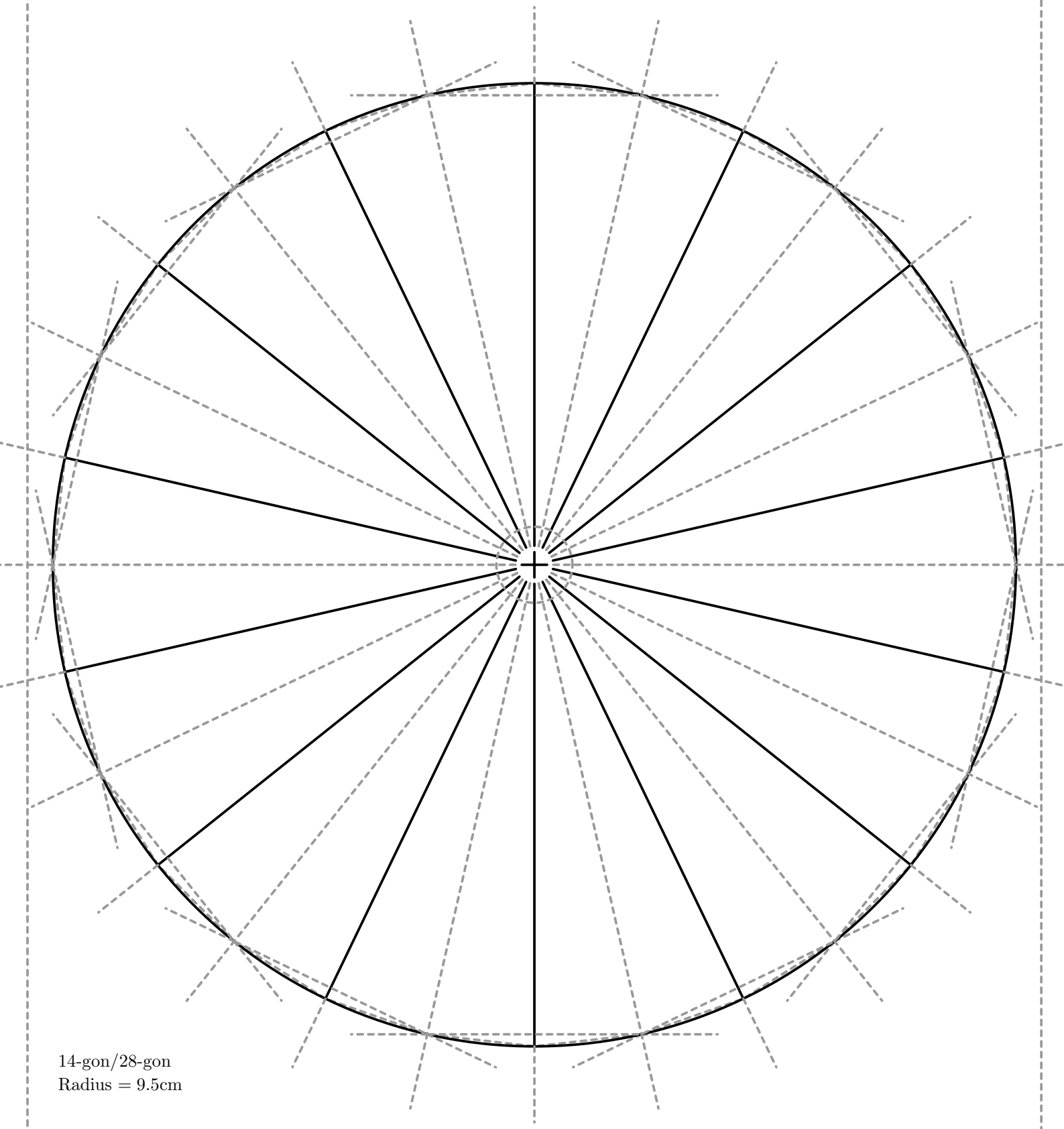
14-gon/28-gon
Radius = 9.5cm

Section 14-gon/28-gon

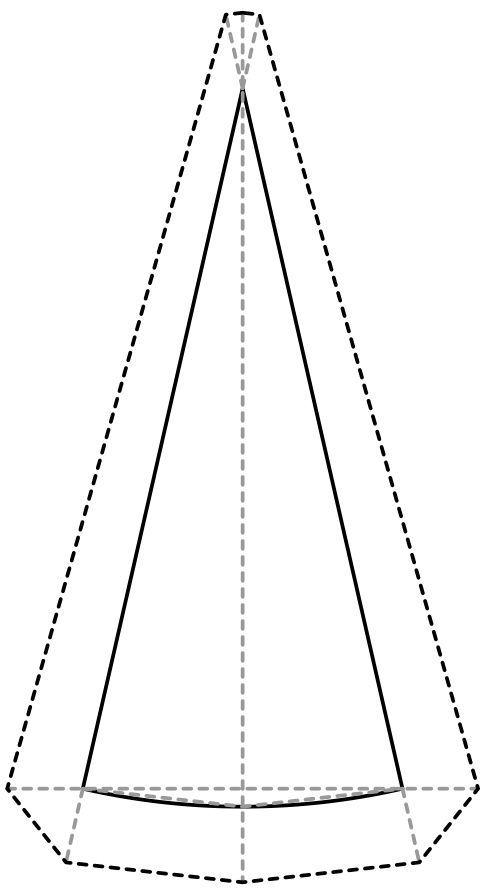

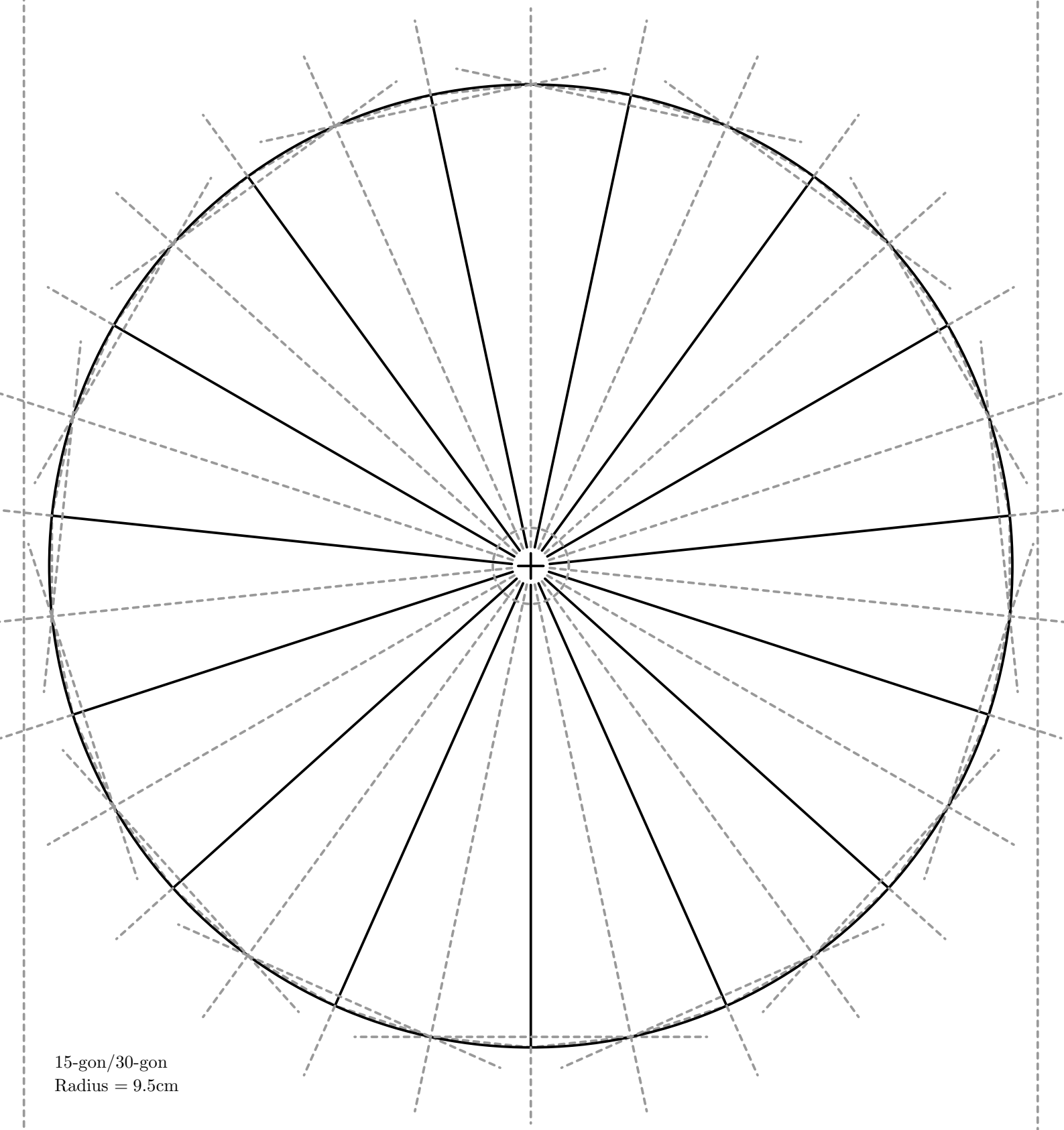
15-gon/30-gon
Radius = 9.5cm

Section 15-gon/30-gon

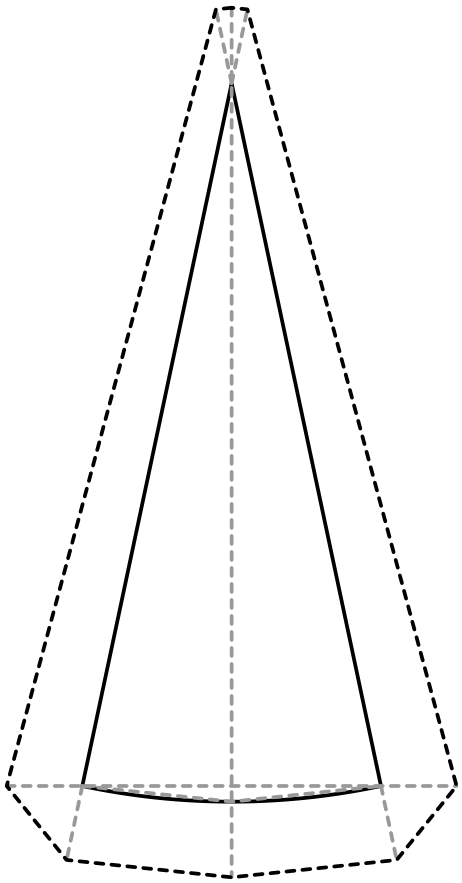

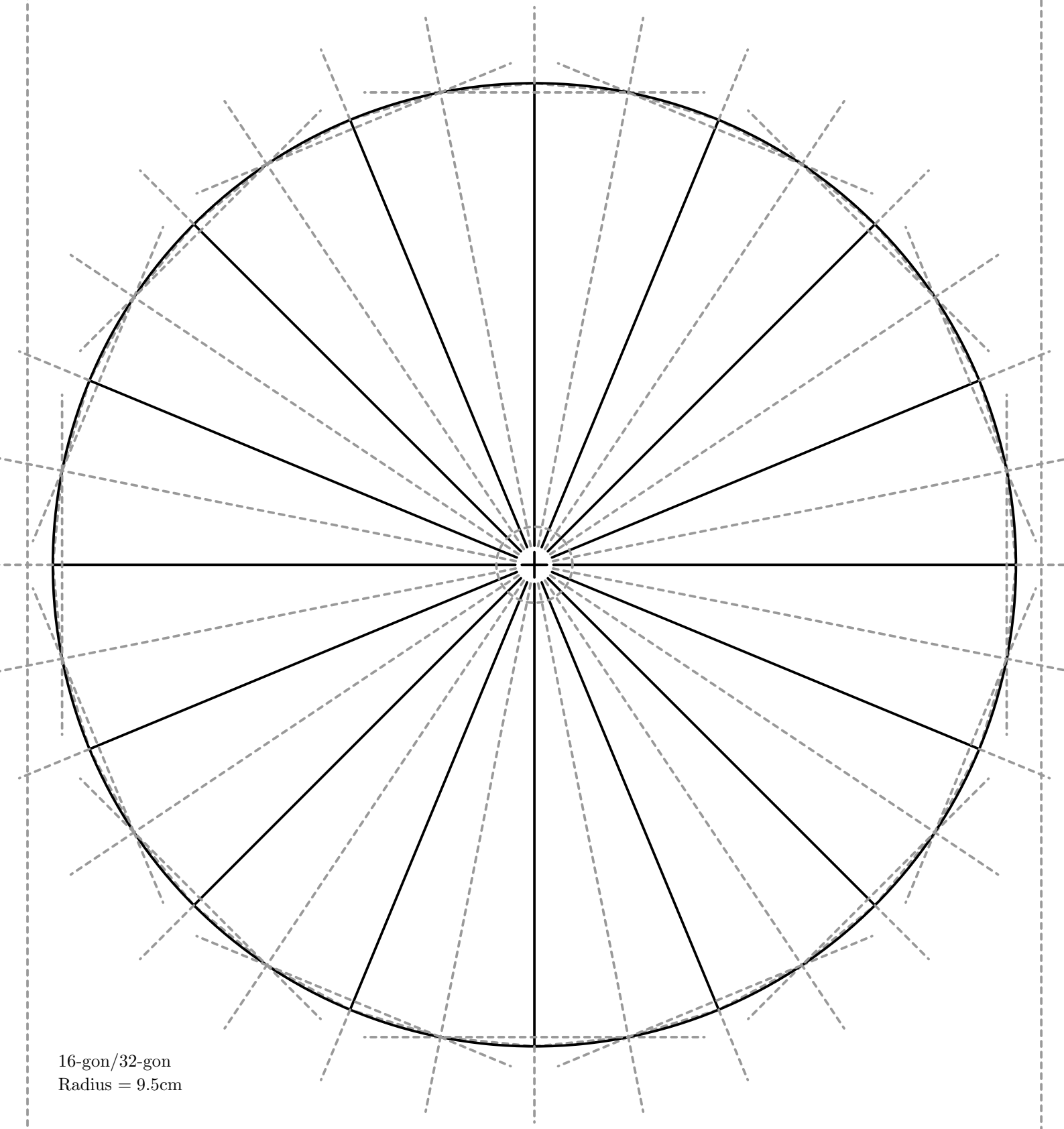

16-gon/32-gon
Radius = 9.5cm

Section 16-gon/32-gon

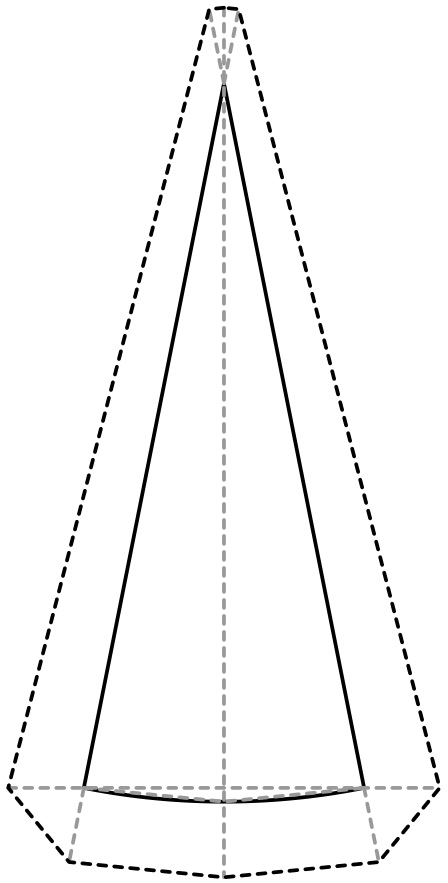

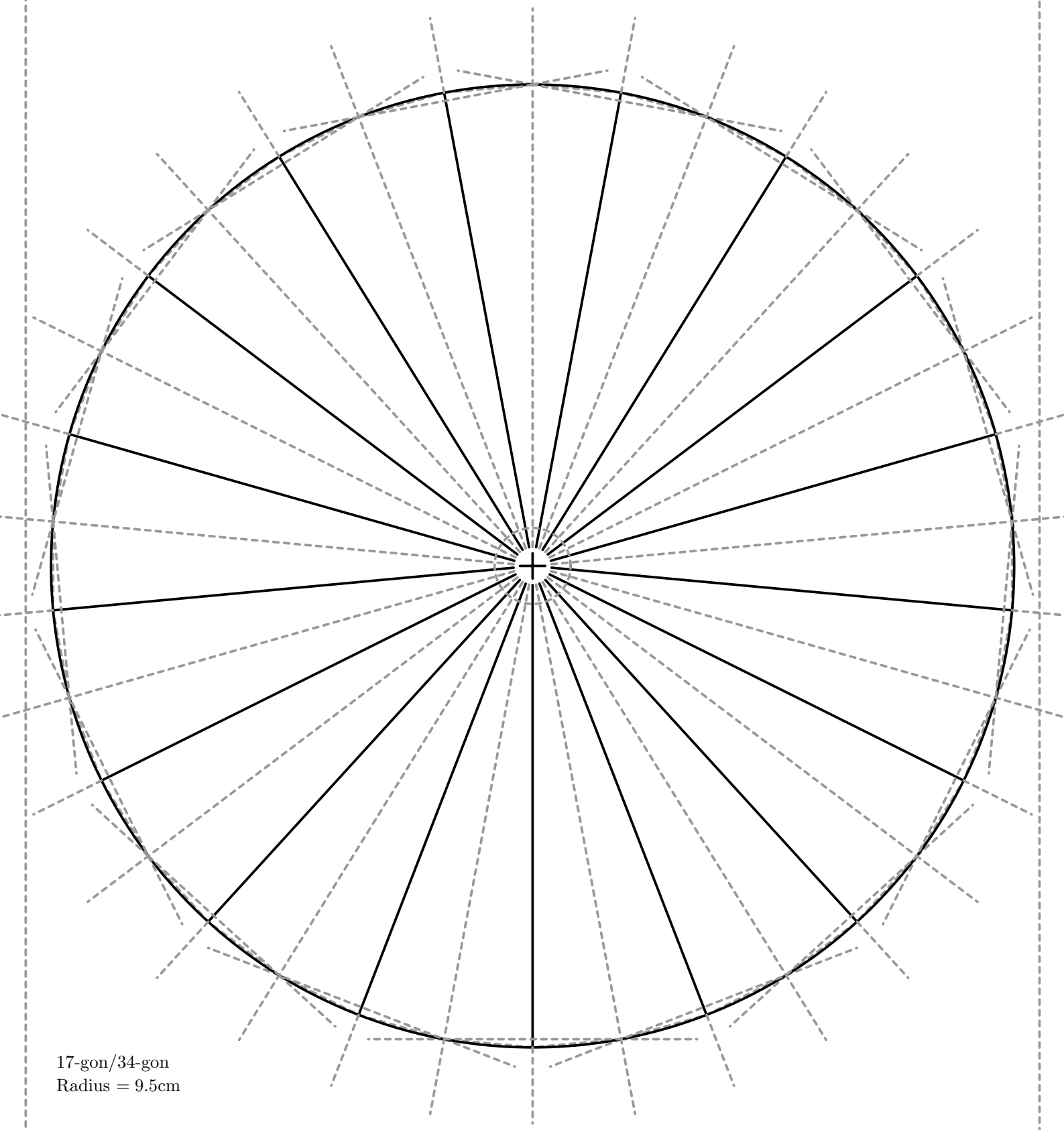
17-gon/34-gon
Radius = 9.5cm

Section 17-gon/34-gon

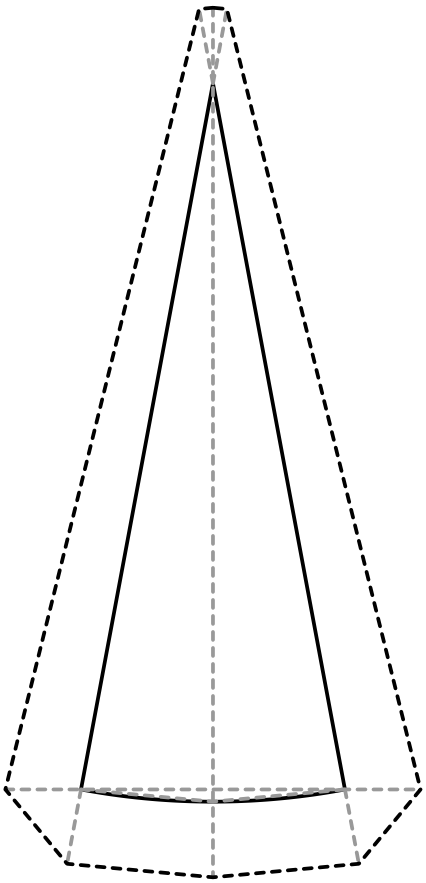

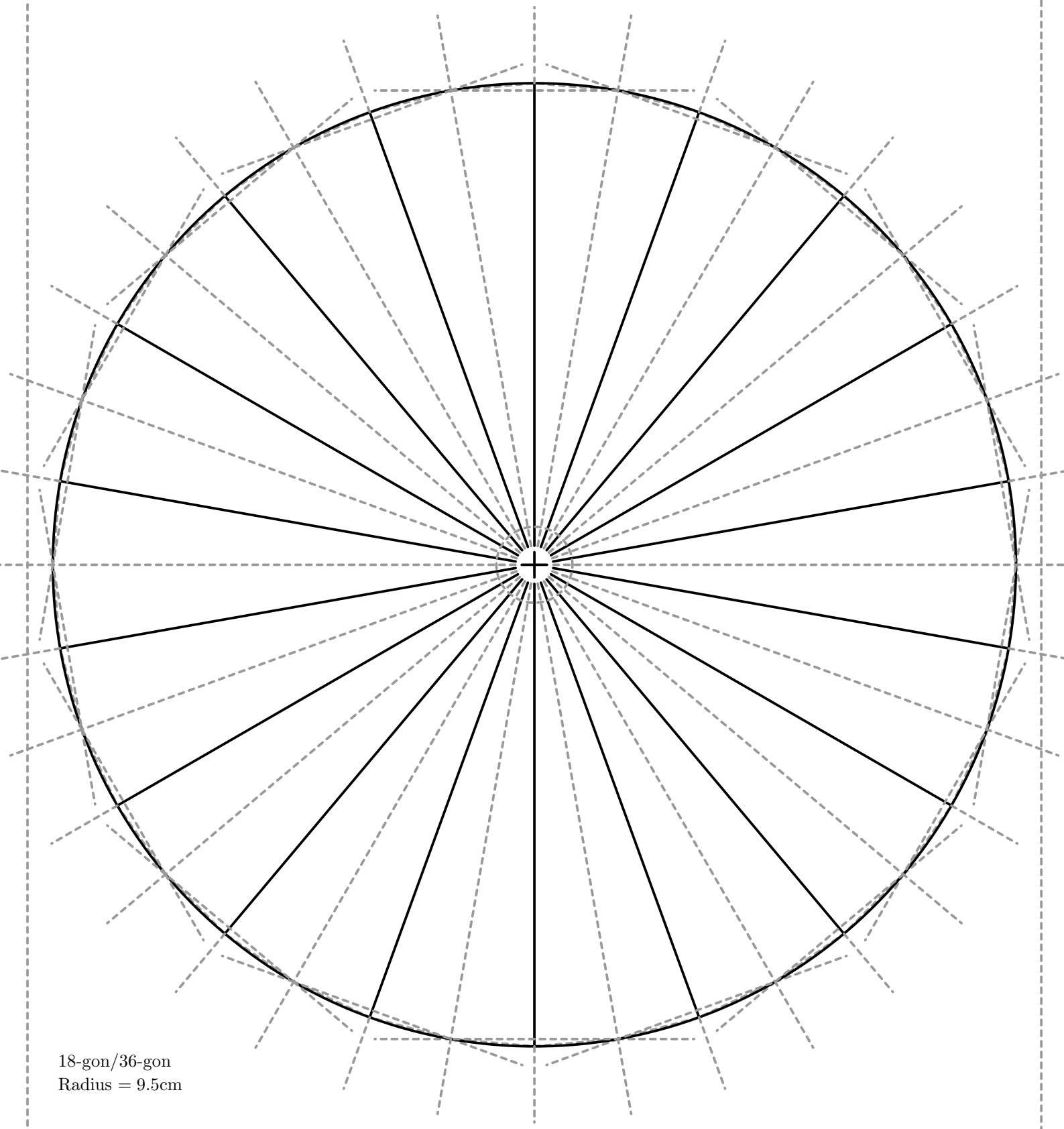

18-gon/36-gon
Radius = 9.5cm

Section 18-gon/36-gon

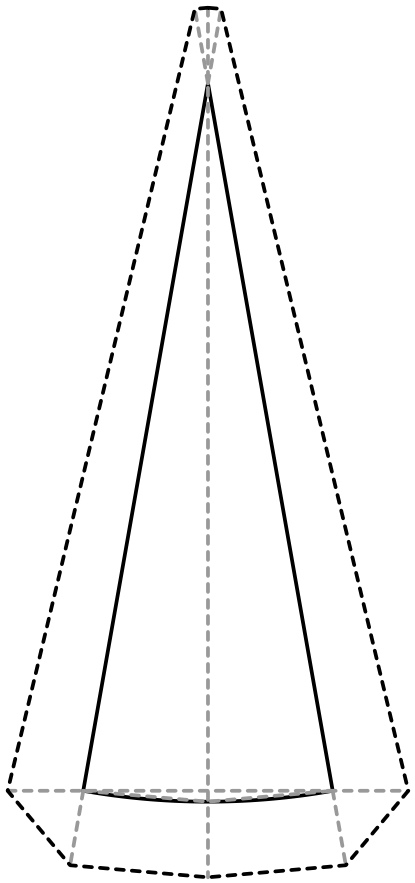

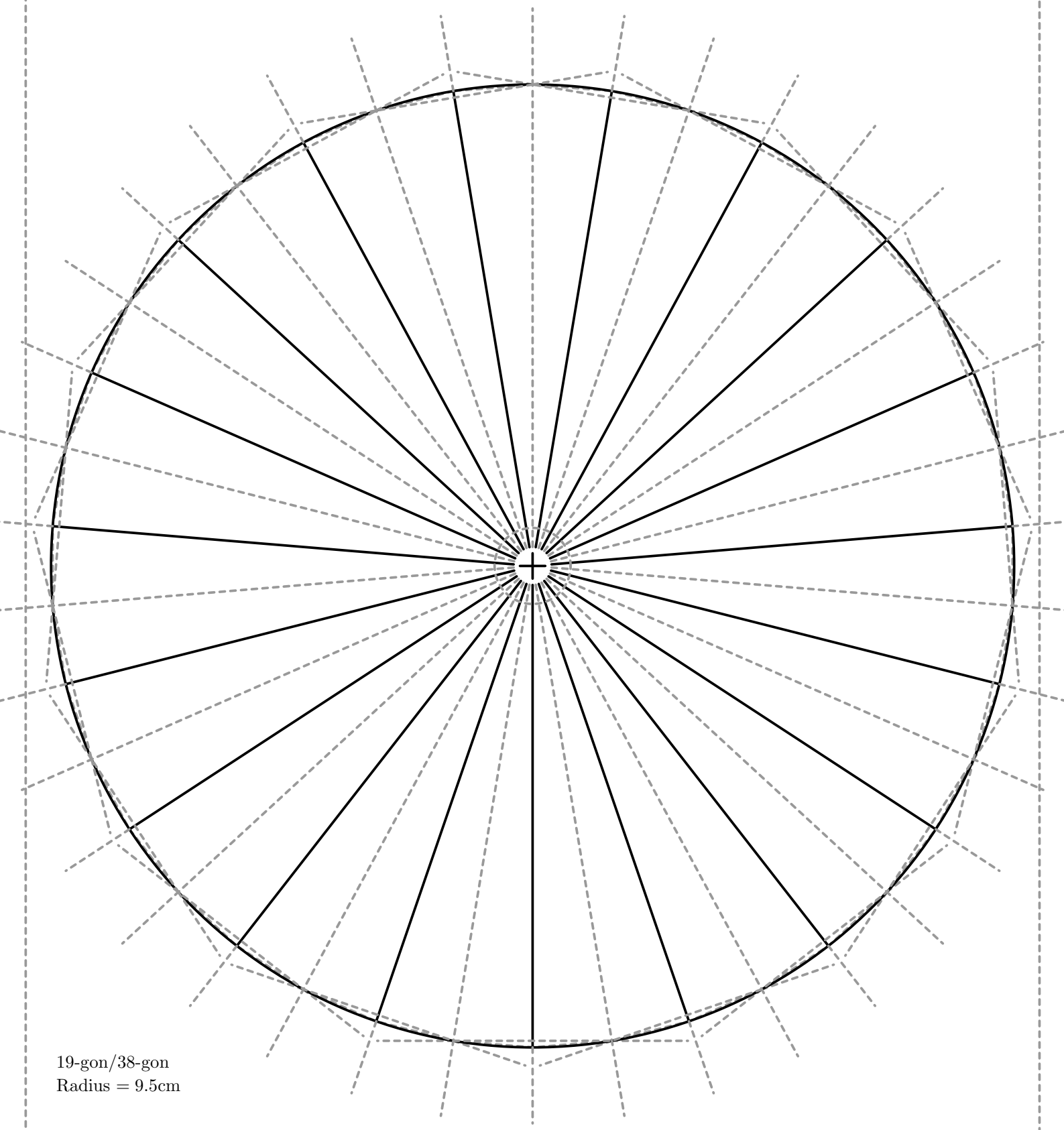

19-gon/38-gon
Radius = 9.5cm

Section 19-gon/38-gon

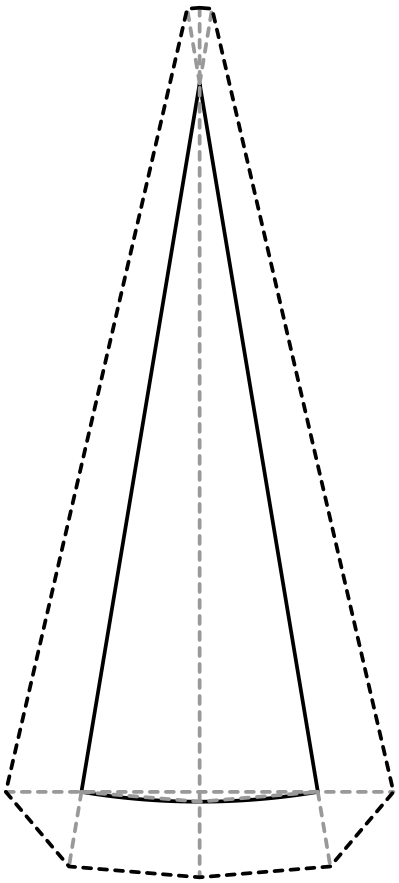

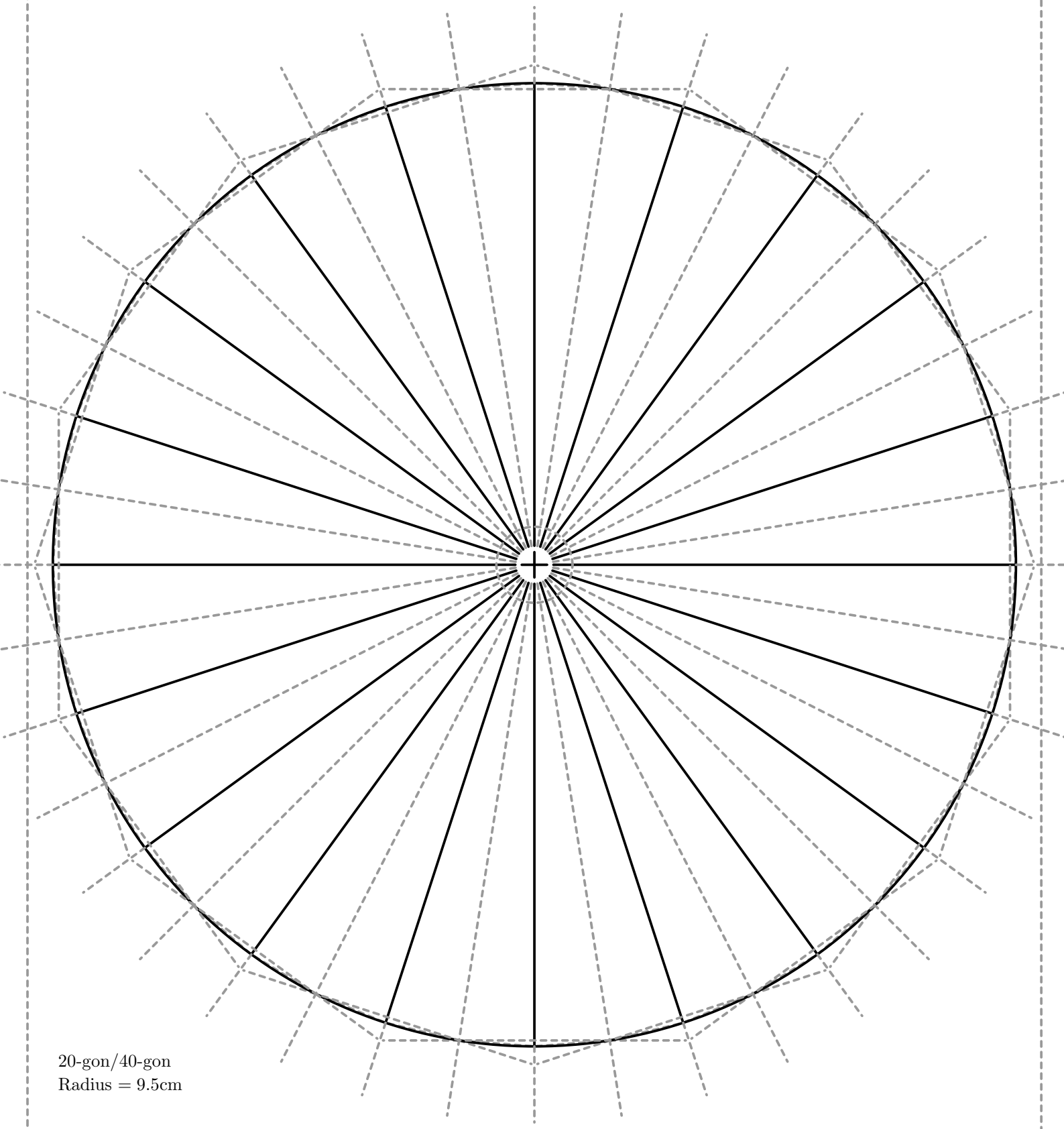
20-gon/40-gon
Radius = 9.5cm

Section 20-gon/40-gon

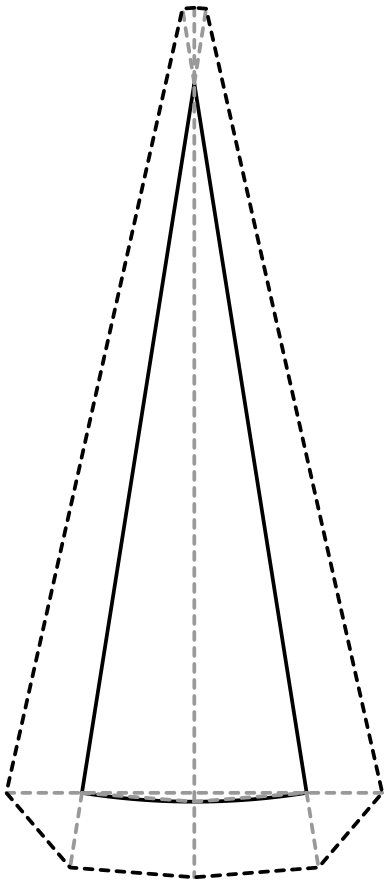

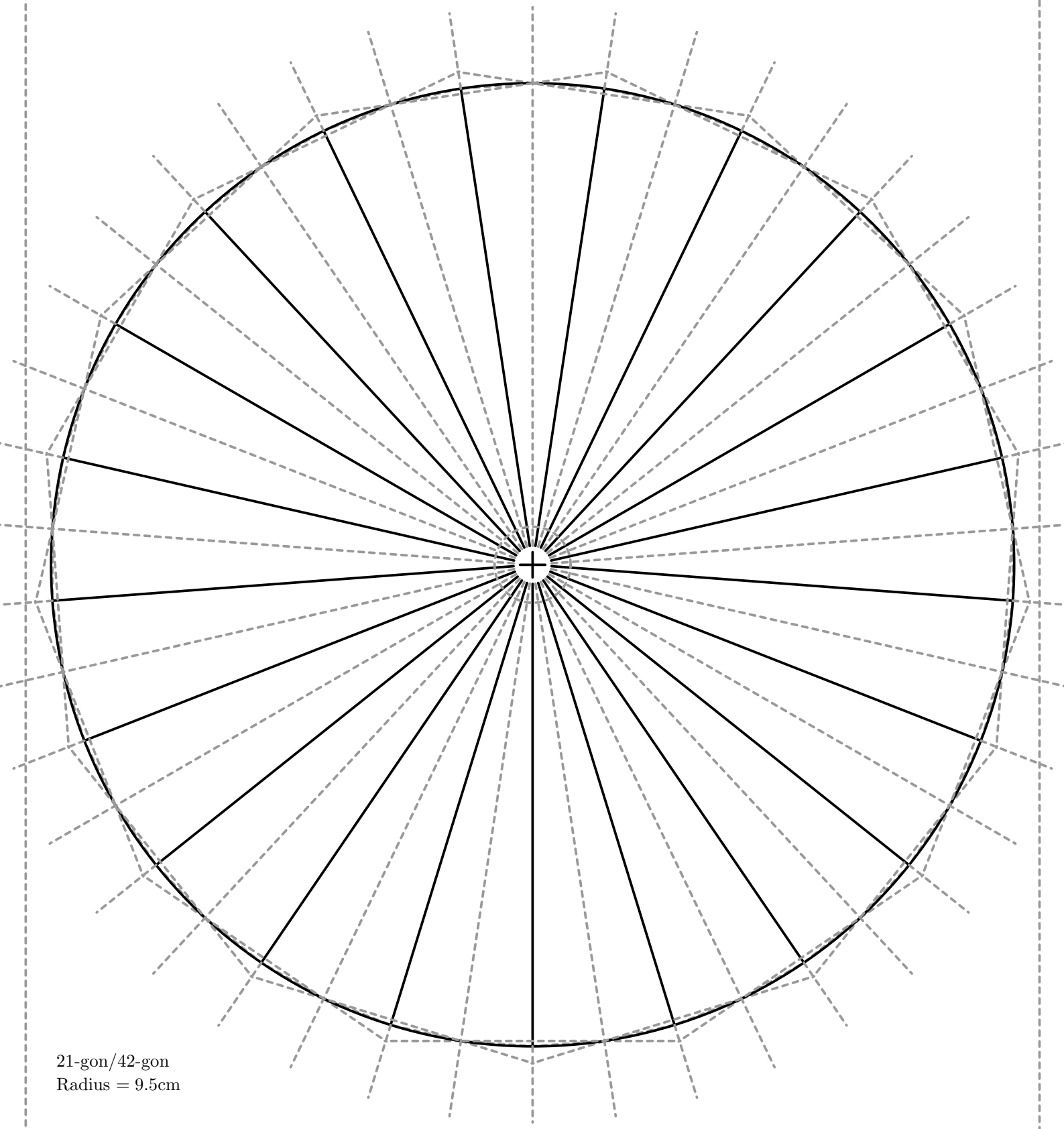
21-gon/42-gon
Radius = 9.5cm

Section 21-gon/42-gon

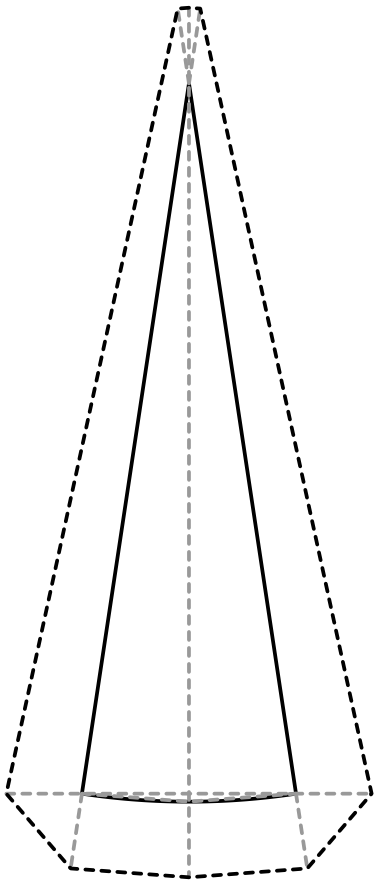

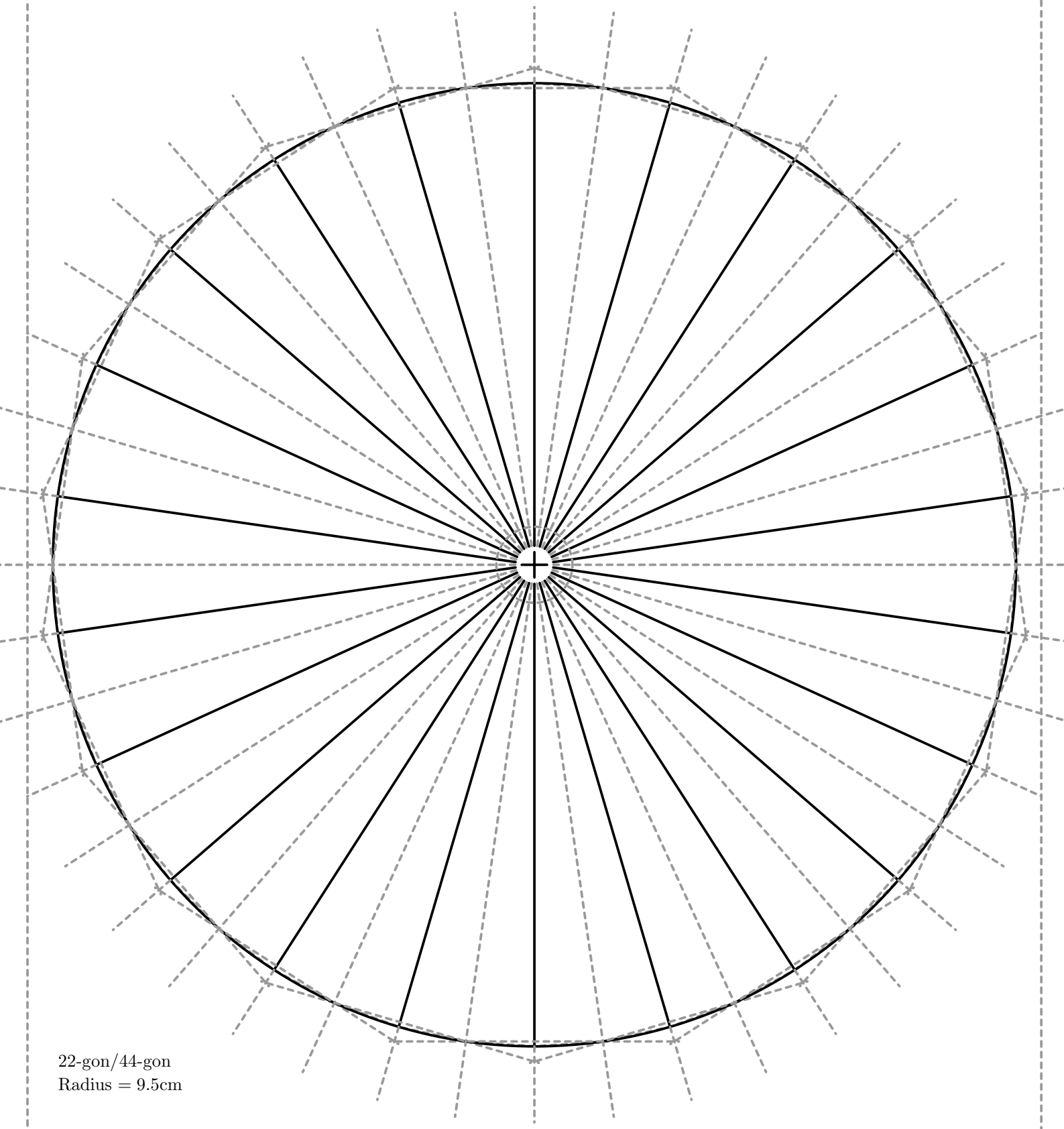

22-gon/44-gon
Radius = 9.5cm
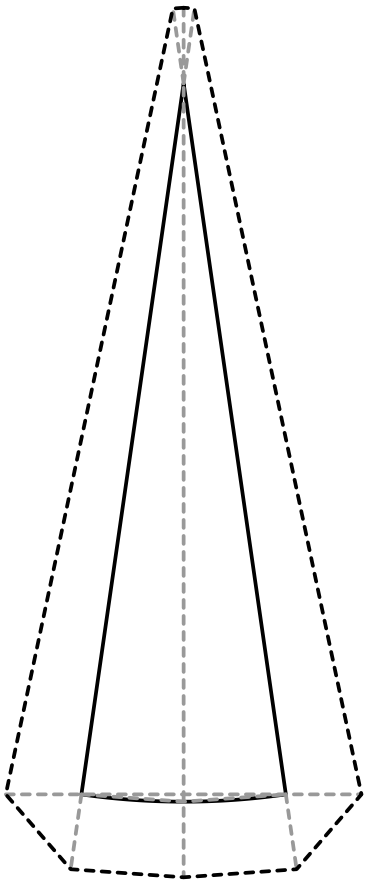
Section 22-gon/44-gon